VARI®

Mulcher

Hurricane F-600

Instructions for use

2006

Contents

1 Basic information. 3
2 Foreword. 4
2.1 Warning 4
3 Operation safety. 5
3.1 Safety regulations. 5
3.2 Declared noise and vibration values 6
3.3 Safety pictographs. 6
4 Use, technical specifications and technical description of the machine. 8
4.1 Machine use. 8
4.2 Technical specifications. 8
5 Instructions for use. 9
5.1 Machine assembly. 9
5.2 Adjustment of handlebars. 10
5.3 Putting into operation. 11
5.4 Starting the cutting blade. 11
5.5 Machine travel forward and back. 11
5.6 Machine stop. 12
5.6.1 Stopping on the plain 12
5.6.2 Stopping on the slope 13
5.7 Working with the machine. 13
5.7.1 Adjustment of cutting height 13
5.7.2 Travel speed choice 14
5.7.3 Sward cutting 15
5.7.4 Problems at cutting 15
5.7.5 Cutting on slopes 15
5.7.6 Machine transport by road 16
6 Maintenance, care and storage. 16
6.1 Machine lubrication. 16
6.1.1 Gear oil change and replenishment 16
6.1.2 Engine oil replacement 16
6.2 Tightening of bolted connections. 17
6.3 Working blade replacement and sharpening. 18
6.4 Replacement of V-belts and adjustment of tension pulleys. 18
6.4.1 Replacement of V-belts 18
6.4.2 Adjustment of tension pulleys 19
6.5 Setting up pulley wires, blade brake. 21
6.6 Adjustment of the automatic brake. 22
6.7 Table of service operations. 23
6.8 Diagnostics of driving problems. 24
6.9 Washing and cleaning of the machine. 24
6.10 Machine storage. 24
6.11 Disposal of packaging and machine after the end of service life. 25
7 Instructions for ordering spare parts. 25
8 Contact to manufacturer. 25
9 The list of parts. 25
10 Letter of Guarantee. 40

Text and illustrations c 2005 VARI,a.s.
Publication No. VL-104-2005
Year on the front page is the year of Manual printing

1 Basic information.

⚠ **Ask your dealer to provide the machine unpackaging, assembly and setup and the briefing!**

Fill in the following data concerning your machine. The data are important for ordering spare parts.

It is advised to have a spare copy of this page with all data on the machine purchase for the case of loss or theft of the original record.

Model	**F-600**
Commercial name	***Hurricane***
Engine model	**Honda GCV 190**
Machine ser. no./Year of manufacture	/
Engine serial no.	
Date of delivery (sale)	
Supplier	
Address	
Tel./Fax/E-Mail/Internet	

Your notes:

Manufacturer **reserves** the right of technical modifications and machine innovations that do not impact the machine function and operation safety. The changes need not be included in this Manual.

2 Foreword.

Dear customer and user,

Thank you for trusting our products. You have become owner of machine from a wide range of machines and attachments made by VARI,a.s. as a system of gardening, farming, small agricultural and communal technology.

The mulcher ***Hurricane*** **F-600** is designed to meet the most exacting requirements of professional use. High-performance engine with a patent-protected cutting edge on the blade guarantee a problem-free mowing of different sward types. Mechanical gearbox with 3 speeds in combination with wide travel wheels and low machine centre of gravity enable an easy machine operation even in the most difficult terrains. Automatic brake and a possibility to lock guide wheels in forward direction provide for a safe operation of the machine namely on slopes.

Please read the Instructions for use carefully. If you follow them properly, you will have our product performing a reliable work for you for years.

2.1 Warning

The user **is obliged** to get acquainted with the Instructions for use and to follow all instructions for the machine operation so that the user's and other persons' health and property cannot suffer any harm.

Safety instructions contained in this manual do not describe all situations or conditions possibly occurring in practical use. Safety factors such as common sense, diligence and scrupulousness are not included; it is assumed, however, that all persons authorized for the machine operation or maintenance do possess them.

The machine can be operated only by persons in good mental and physical condition. For the professional use of the machine the machine owner is obliged to ensure a work safety training and provide instructions on machine control for operators and to keep records on these trainings and briefings. **Also, he is obliged to carry out a so-called categorization of works according to the relevant national legislation.**

Should some instructions in the manual be unintelligible, you are encouraged to **contact your dealer** or directly the manufacturer of the machine. The contact address and telephone/fax connection are to be found at the end of this manual.

The manuals of Instructions for use supplied with the machine are an integral part of the machine. They have to be available at any time, placed at a well accessible place with no risk of their damage. In the case that the machine is sold to another person, the Instructions for use must be given to the new machine owner. If the above conditions are not met, the manufacturer bears no responsibility for possible risks, accidents and injuries resulting from the machine operation.

The manufacturer bears no responsibility for damages caused by unauthorized and incorrect use of the machine and for damages caused by any machine modifications not authorized by the manufacturer.

To prevent injuries to operators and other people occurring in the vicinity of the machine, it is absolutely necessary to follow safety regulations marked in the Instructions for use with the following warning safety symbol:

⚠	**On seeing this symbol in the Manual, read the following instructions carefully!**

Note: Left and right side – as mentioned in the Manual – are at all times meant as viewed from the site of the operator.

3 Operation safety.

3.1 Safety regulations.

⚠ This international symbol indicates important messages concerning safety. When you see the symbol, be aware of a possible injury threatening to you or to other persons and read the attached instructions carefully.

⚠ The machine operator must be over **18 years of age**. **He (she) is obliged** to get acquainted with the instructions for use of the machine and is supposed to be informed of the general principles of work safety.

⚠ Prior to carrying out any activities in the near vicinity of the machine, switch the engine off and wait until the cutting blade stops moving! Before leaving the machine alone, always switch off the engine!

⚠ Never let the engine running at maximum speed or idling for a long time with the cutting blade and travel wheels drive clutch switched off! Components of the machine drive (V-belt, belt pulley, clutch pulley, etc.) might get damaged!

⚠ **Prior to each employment of the machine**, check its parts (working mechanism or its casing in particular) for a possible damage or loosening. **Defects must be rectified without any delay**. Repairs are to be made only with the original spare parts.

⚠ Before using the machine, the stand to be cut must be cleared of solid bodies such as stumps, branches, stones, wires, loose construction debris, etc., which could be flinging up or which might damage the machine. If these cannot be removed, avoid working in such places.

⚠ The machine is equipped with a rotating working implement. Maximum circumferential speed is **72,3 m.sec^{-1}**. Therefore, make sure that other persons move at a safe distance from the machine when it is in operation with regard to a possible flying away of the cut stand or flung out solid objects!

⚠ With respect to the exceeded recommended values of noise and vibrations, you are warned to observe the following instructions when working with the machine:

a) Protect your hearing by using suitable protective aids specified in **CSN EN 352-1** (shell ear protectors) or **CSN EN 352-2** (plug ear protectors). Require the aids from your dealer.
b) Working with the machine should be interrupted after max. 20 minutes for a minimum break of 10 minutes. During these breaks, the machine operator must not be exposed to the impact of another source of noise or vibrations.

⚠ Machine operators should use working aids authorized to **CSN EN 166** or **CSN EN 1731** (tight-fitting garments, sturdy shoes, working gloves and protection glasses). Keep a safe distance given by the handlebar.

⚠ Don’t start the engine in enclosed spaces! Pay increased attention when handling the machine since the exhaust silencer remains hot after the engine has been switched off; make sure there are no leakages and spills on engine parts when refuelling. If they happen to occur, dry out the stained parts or wait until the petrol evaporates.

⚠ When the machine is in operation, all other persons (children in particular) and animals have to be outside the machine's working space. The machine operator can continue working only after they have been shown out to a **safe** distance (see Pictograph 6).

NOTE: The outer safety zone A around the inner working zone B is specified in standards EN 12733 and CSN EN 12733. Entry into the working zone is to be prevented by using appropriate prohibitory signs. Distance between the individual sides of zones A and B must not be less than 50m. Should the dangerous zone of machine operation be entered by a person or animal, the machine operator must release the cutting implement drive lever without any delay and wait with the further work until the zone is clear again.

⚠ Removal of any protective equipment and casings from the machine is forbidden.

⚠ The **safe** slope accessibility of the machine is 10°. Maximum inclination of the engine at work is 20° for a long-time operation and 30° for a shorter time (up to 1 minute).

NOTE: The machine should be preferably not used on wet grass. The terrain you are moving on must be always safe. Do the work while walking not running. Be particularly careful when changing direction on the slope. Cutting on steeply inclined slopes should be prevented. If you fall, do not hold the machine but release your grip on it.

⚠ All kinds of the machine repair, adjustment, lubrication and cleaning are to be made with the machine switched off and spark plug cable disconnected.

3.2 Declared noise and vibration values

***Hurricane* F-600**	**A**	**B**	**C**
HONDA GCV 190	L_{pAd} = 84+1 dB	L_{WA} = 98 dB	a_{hvd} = 7.3+2.92 m.s^{-2}

Explanatory notes:
A = declared emission level of acoustic pressure A at operator's site $L_{pAeq,T}$ (according to ČSN EN 12733, Attachment B and ČSN EN ISO 11 201)
B = guaranteed level of acoustic performance of the machine L_{WA} (according to Government Regulation no. 9/2002 Gaz.)
C = declared sum of accelerated vibrations transmitted onto operator's hands/arms (according to ČSN EN 12733, Attachment 6, Point C.4.1.1.1 and ČSN EN ISO 20643).

3.3 Safety pictographs.

The user is obliged to maintain the pictographs on the machine legible and to provide for their replacement in the case of damage.

No.	**Location**	**Description of the safety information**
1	Left side of chassis	Manufacturing label with machine information and CE sign
2	Upper cover of gearbox	Guaranteed level of machine's acoustic performance
3		Instructions for use to be studied prior to machine operation and maintenance During the machine maintenance the conductor is to be disconnected from the spark plug Entry of exposed and other persons into the machine's working space is prohibited Safe slope accessibility
4	Front lifting cover	Arrow for the direction of tool rotation – to the right
5	Left rear side of blade cover upper surface	Instructions for use to be studied prior to machine operation and maintenance During the machine maintenance the conductor is to be disconnected from the spark plug Putting one's hands or feet into the cutting blade working space is prohibited – Danger of limb cut (off)
6	Right rear side of blade cover upper surface	Entry forbidden for other persons and animals. Minimum safe distance from the machine. Danger of injury by flying-off material fragments and flung objects. Other persons and animals to be kept at a safe distance from the machine.
7	Right control lever	Cutting blade drive switch. "0" = blade does not turn, "1" = blade in rotation
8	Next to accelerator lever	Lever positions for adjustment of engine rotations
9	Left control lever	Machine travel switch. "0" = machine stands still, "1" = machine travels
10	Swivel handlebars holder	Danger of fire when refuelling
11	In front of right rubber handle	Adjustment of minimum and maximum cutting height

1

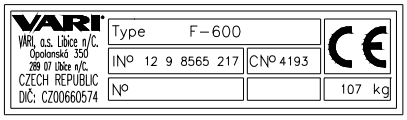

2

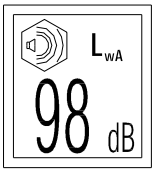

3

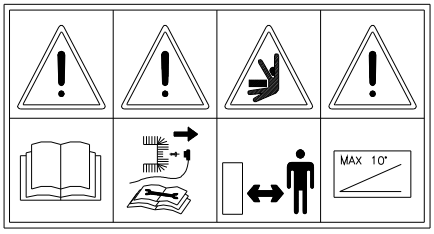

4

5

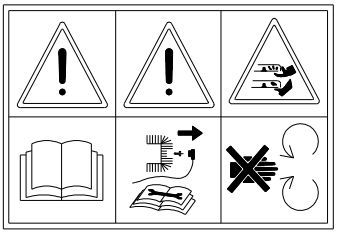

6

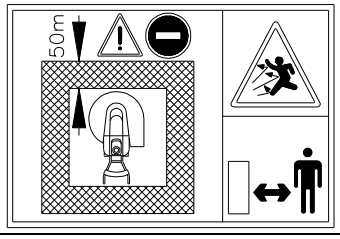

7

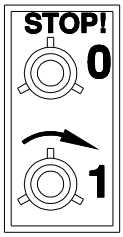

8

9

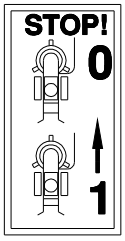

10

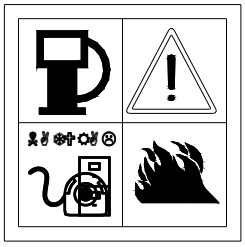

11

4 Use, technical specifications and technical description of the machine.

4.1 Machine use.

This mulcher is designed for mowing swards of all kinds of stalky grasses, preferably old and dry, on both maintained and not-maintained sites. The mulcher can be used for cutting woody species from self-seeding up to a diameter of 1.5 cm. Periods most suited for the machine use are those when the swards are dry and the cutting blades are capable of crushing them into small pieces which need not be removed from the surface. The maximum recommended height of swards emerged in the same period when cut is up to 50 cm. This maximum height may decrease according to sward density, moisture content and type.

⚠ **Working width must be at all times accommodated to the density of the mown sward.**

With respect to tyre profile and system of cutting height setup, the machine is not designed for park treatment of green areas.

4.2 Technical specifications.

***Hurricane* F-600**	**Unit**	**Value**
Length (inc. handlebars)	mm	1940
Width	mm	640
Height (incl. handlebars)	mm	1190
Weight	kg	107
Maximum working width of the machine	cm	57
Cutting blade adjustment height above solid underlay	cm	5 – 9
Blade speed (at max. engine revolutions)	min^{-1}	2424
Circumferential blade speed (at max. engine revolutions)	$m.s^{-1}$	72,3
Travel speeds (at max. engine revolutions)	$km.h^{-1}$	1.42 – 2.16 – 3.79 – R 2.74
Area performance of the machine (according to sward type and travel speed)	m^2/h	809 – 2160

Engine	**Unit**	
Type		HONDA GCV 190
Cylinder volume	cm^3	187
Bore x stroke	mm	69 x 50
Max. performance at revolutions	kW/min^{-1}	4.8/3600 (6.5 HP)
Max. torque at revolutions	$N.m/ min^{-1}$	13.2/2500
Max. engine revolutions adjusted	min^{-1}	3400 (+/- 100)
Fuel tank capacity	litres	1.1
Petrol (unleaded)	oct.no.	91-95
Oil filling	litres	0.55
Oil	API	SH or SJ
Spark plug	--	NGK BPR6ES BRISK LR15YC

Figure 1: Mulcher *Hurricane* F-600

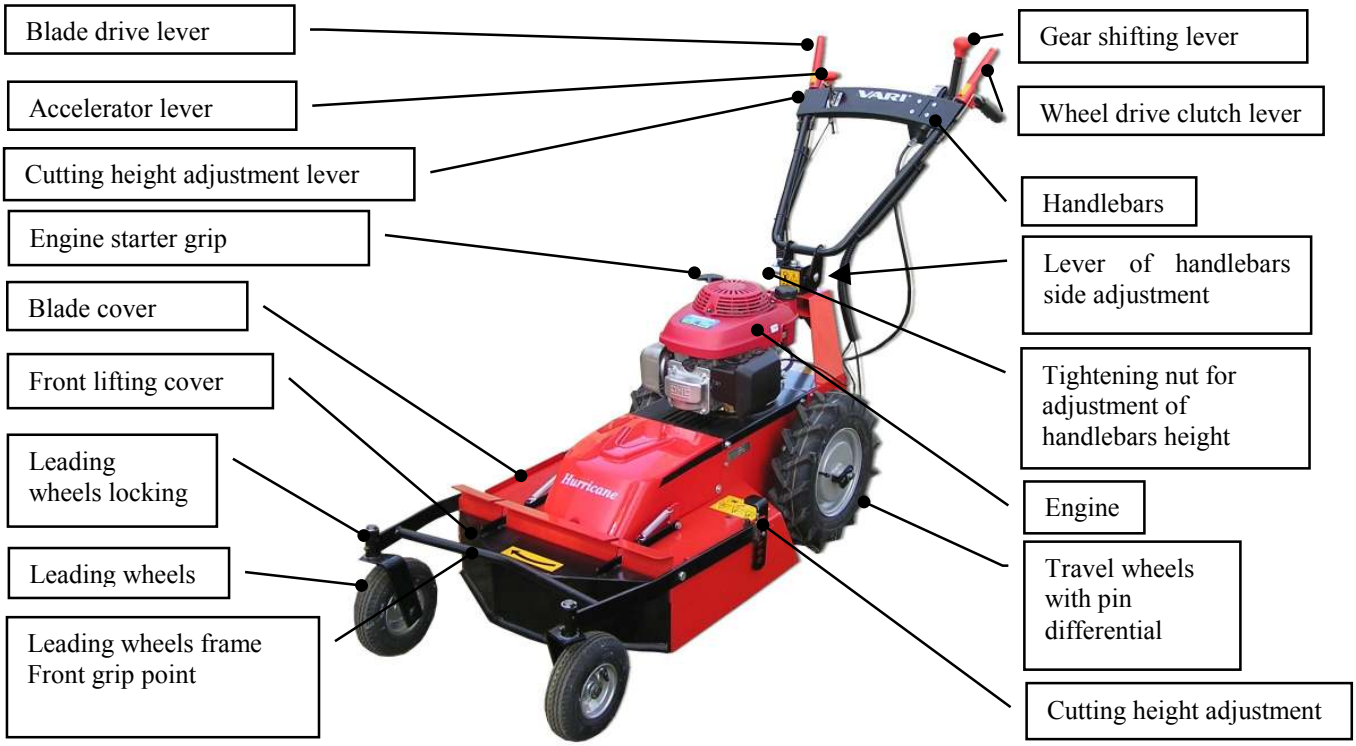

5 Instructions for use.

5.1 Machine assembly.

Ask your dealer to provide unpackaging of the machine and briefing in machine operation.

With respect to difficult withdrawal of the machine from the box, it is advised to cut the box through in corners and then to take off the machine onto a fixed rest. Grip points: front – blade cover edge, rear – tube of handlebars grip. Regarding the machine weight, work with a minimum of one other person.

If you assemble the machine yourself, please follow the instruction below:

1. Remove all parts from the bag and the leading wheels from the machine.
2. The front lifting cover is mounted above the chassis deflector because of the packing reason; to achieve correct functionality of the machine, it is necessary to dismount it and mount it back under the chassis deflector, see fig. 2.
3. Unloose the tightening nut on the handlebars (see fig. 3, position 1) and put the handlebars to the working position. Turn the handlebars anti-clockwise around the vertical axis by 180°, so that the grips point backwards. Avoid contortion of the bowden cables!
4. Hook the springs (1) into eyes in front cover arms and into holes in footings on the blade cover with a suitable hook.
5. Screw the leading wheels on the footings in the front of the blade cover by means of bolt (2), flat washer 10.5 mm (3) and self-locking nut M10 (4). When putting the leading wheels frame into the lock-plate guiding, the locking pin must be pushed in (by pressing the lever of cutting height adjustment on the right handlebar grip – see fig. 1).

Figure 2: Machine assembly

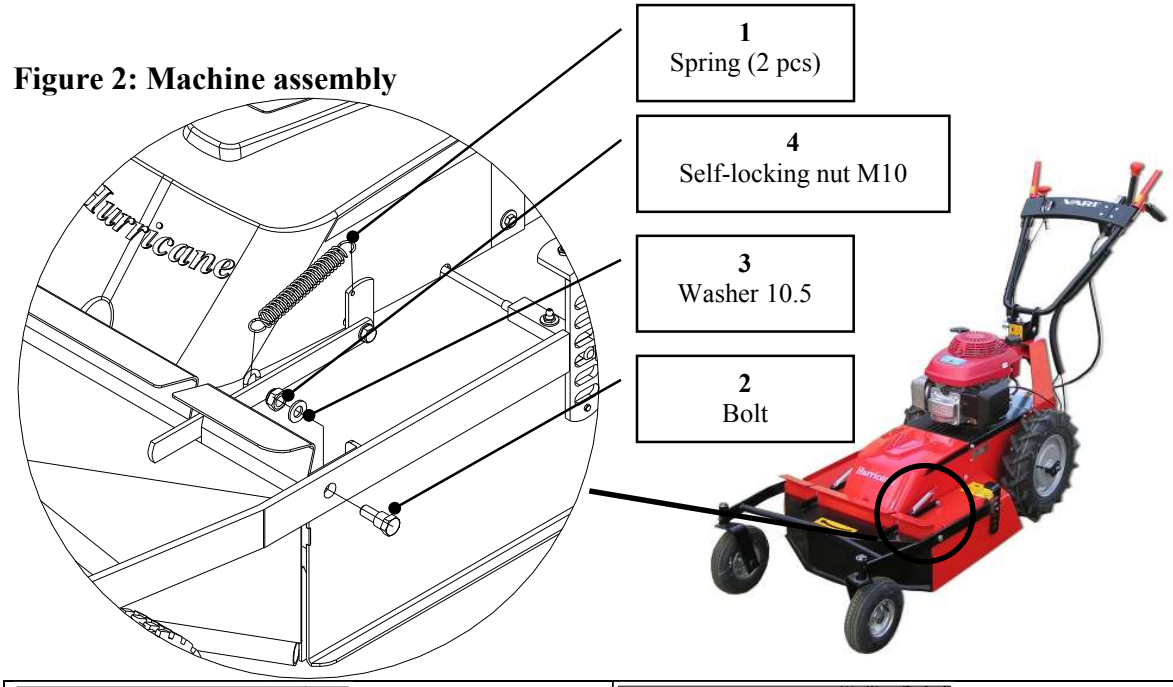

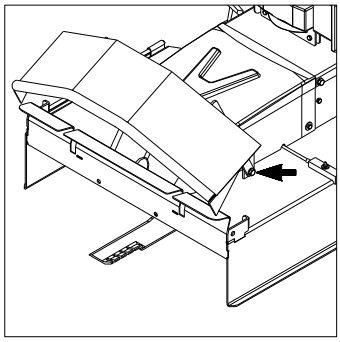

Unscrew the front cover from the machine chassis (on both sides)

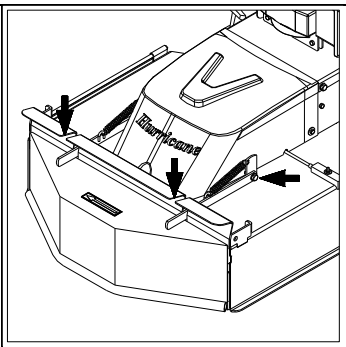

Run the front cover through the cutouts in the chassis deflector (the front cover must crane at the deflector when lifting) and screw it back to the machine chassis. Tighten the nuts so that the cover can be freely lifted. Mount on the springs.

5.2 Adjustment of handlebars.

Handlebars can be adjusted in two planes:

- Height: Loosen tightening nut M10 (position (1) in Fig. 3) and do the adjustment of handlebar grips at height comfortable for the operator.
- To sides: Press down the lever (position (2) in Fig. 3) and turn the handlebars by one position to the left or to the right.

In order to lessen the machine size e.g. for transport in a car, the handlebars should be either tilted forward over the engine or lowered into horizontal position and then turned clockwise by 180°. Bowden cables must be watched not to get tensioned somewhere on the machine construction.

Figure 3: Adjustment of handlebars

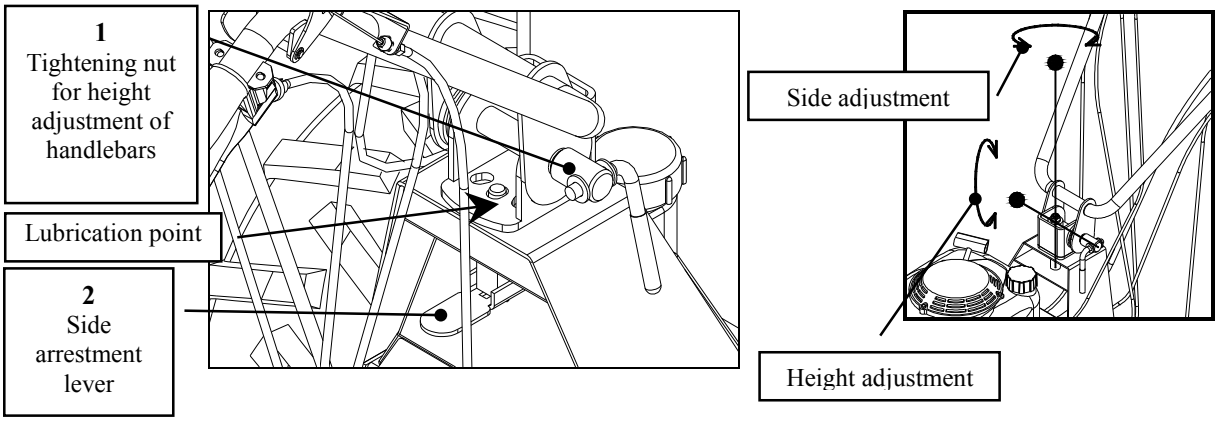

5.3 Putting into operation.

⚠ **The machine may be delivered without engine fillings (in dependence on different national regulations)!**

⚠ **First thoroughly read the instruction for engine use. You can prevent a possible damage to the engine.**

1. Check oil volume in the engine and/or fill the engine with the prescribed oil grade and volume. Fill the tank with the prescribed amount and type of petrol.
2. Move the accelerator lever into the front position (**„CHOKE“**). Start the engine by pulling on the manual starter (instructions for starting see guidelines for engine use).
3. Let the new or cold engine running on choke for about 30 seconds (accelerator lever in the **„CHOKE“** position), and then move the accelerator lever into the position **„MAX“**. In this position let the engine running for about 30 seconds.

⚠ **Do not leave the machine alone when doing this!**

5.4 Starting the cutting blade.

⚠ **When starting the engine, the two levers on the handlebars must be in the off position.**

1. Start the engine while adhering to instructions presented in the operating manual for engine use.
2. Set-up maximum engine rotations by using the accelerator lever in the right part of the handlebars crossbar. (Should the engine be cold, let it warm up at maximum rotations for about 1 minute).
3. Grasp the left handlebar grip with your left hand. Then slowly press the cutting blade drive clutch lever on the right handlebar grip with your right hand.

⚠ **Press the lever slowly up to about two thirds of the stroke so that the cutting blade can start rotating and the engine does not stall**.

Starting of the cutting blade is accompanied with a partial V-belt slippage and with the accompanying phenomena such as whistling, rattling, etc. The phenomenon usually disappears after the belt has started properly moving.

4. After the cutting blade starts turning, press the lever completely to the handrail and hold it firm.

Note: If the blade drive is switched on during cutting again, engine stalling may occur due to resistance of grass biomass in the space of blade cover. This space must be –if possible – always properly emptied when starting the blade drive (see Chapter 5.7.4).

In a new or cold engine, a few of the cutting disk starts may result in engine stalling. The phenomenon will disappear after the engine warms up. If the disk drive cannot be started even after the engine has got warm, follow the table presented in Chapter 6.8 for diagnostics.

5.5 Machine travel forward and back.

Machine travel **forward** and **back** is controlled by the **upper red** sheet-iron lever on **the left** grip of the handlebars.

- **Travel forward:** Shift into one of gears (1 - 3) by using the gear-shifting lever. Then press the upper red sheet-iron lever on the left handrail completely down to the grip and the machine will start moving forward (sometimes with a little delay due to the run-out of

the pin differential in wheels). Start walking simultaneously with the machine start, adapting your walk pace to the direction and speed of the machine.

⚠ **Be prepared when the machine starts moving with a little jerk.**

- **Travel back:** Move the gear-shifting lever to the „R“ position. Then press the upper red sheet-iron lever on the left handrail down to the grip and the machine starts moving in reverse direction (sometimes with a little delay due to the run-out of the pin differential in wheels). Start walking simultaneously with the machine start, adapting your walk pace to the direction and speed of the machine.

⚠ **Be very careful when moving backwards with the machine!**

⚠ **Start driving with approximately ½ of maximum engine revolutions if you want to travel backwards. After the machine is in motion, set the engine revolution on the level, which ensures that your walking pace is still safe.**

Figure 4: Handlebars and control levers

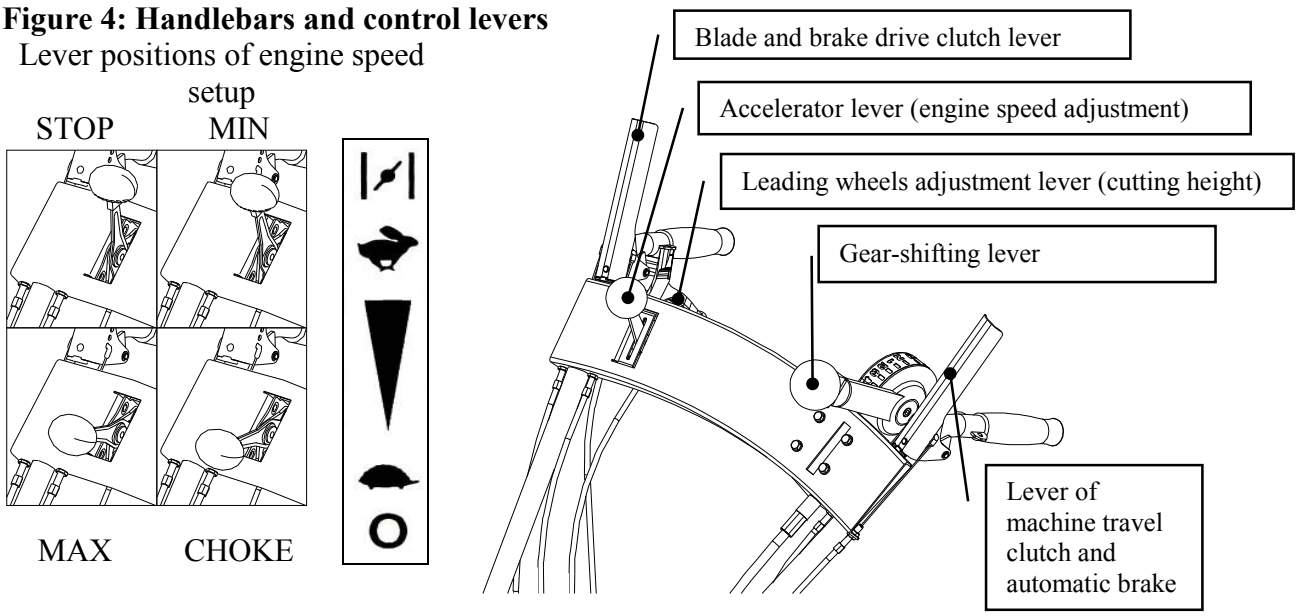

Note: All four main positions of engine speed adjustment lever are arrested by means of a simple system (dent/rib) in the lever body.

5.6 Machine stop.

5.6.1 Stopping on the plain

If you wish to stop the machine travel, release the lever on the left handlebar grip. The machine will stop moving but the blade will still turn. The cutting blade drive will be switched off after release of the lever on the right handlebar grip. The safety brake will stop the blade.

⚠ **Prior to carrying out any activities in the near vicinity of the machine, switch off the engine and wait until the cutting blade stops! Always switch the engine off before leaving the machine!**

⚠ **Never let the engine running at maximum speed or idling with the cutting blade drive clutch released and with the released clutch of travel wheels drive for a long**

time! Machine drive components (V-belt, belt pulley, clutch pulley, etc.) might suffer damage!

If you wish to switch the engine off, do it by shifting the lever to the „**STOP**" position.

⚠ **In the case of any critical situation, release your hold on the handlebars without any delay. Do not hold on the machine! The levers will return to their zero position, the machine and the cutting blade will stop (while the engine is still running at set-up revolutions; this is why it is to be switched off by shifting the lever to the „STOP“ position as soon as possible!)**

5.6.2 Stopping on the slope

The machine is equipped with an automatic brake, which – if properly adjusted – will safely put the machine to stop on a slope up to 30°. The automatic brake is put into operation after releasing the machine travel clutch lever on the left handlebar.

⚠ **Never let the engine running at maximum speed or idling with the cutting blade drive clutch released and with the released clutch of travel wheels drive for a long time! Machine drive components (V-belt, belt pulley, clutch pulley, etc.) might suffer damage!**

5.7 Working with the machine.

⚠ **Before using the machine, the stand to be cut must be cleared of solid bodies (such as stumps, branches, stones, wires, loose construction debris, etc.), which could be flinging up or which might damage the machine. If these cannot be removed, avoid working in such places.**

⚠ **Working width has to be at all times accommodated to stand density!**

⚠ **If possible, do not use the machine on wet grass. Remember that the terrain you are moving on must always be safe. Walk (never run) at work. Be careful especially when changing the machine direction on slopes. Do not cut on steep slopes. When accidentally falling, immediately release your hold on the machine.**

5.7.1 Adjustment of cutting height

Adjustment of cutting height is affected by several important factors:

- sward height and density
- plant species prevailing in the sward
- machine travel speed
- working width
- surface unevenness

There is a general rule that the higher value of above mentioned factors, the greater height of guide wheels and cutting blade height adjustment above the surface. The cutting height should prevent overfilling of the blade working space as such a situation reduces the blade speed, the engine cannot work at optimum revolutions and the self-cleaning capacity of cutting blade space from accumulated grass biomass is impaired.

⚠ **Prior to working a terrain irregularity, increase at all times the cutting height to the very maximum. In this way you will prevent blade damage.**

Cutting height adjustment by means of guide wheels:

a) push on both handrails so that the arresting pin in the arresting plate is released
b) press the black plastic lever of cutting height adjustment on the bottom side of the right handlebar grip with fingers of your right hand (see Fig. 4).
c) reduce or increase the height of guide wheels adjustment by pushing on the two handrails
d) adjust one of oval holes on the arresting plate against the arresting pin
e) release the lever

Figure 5: Cutting height adjustment

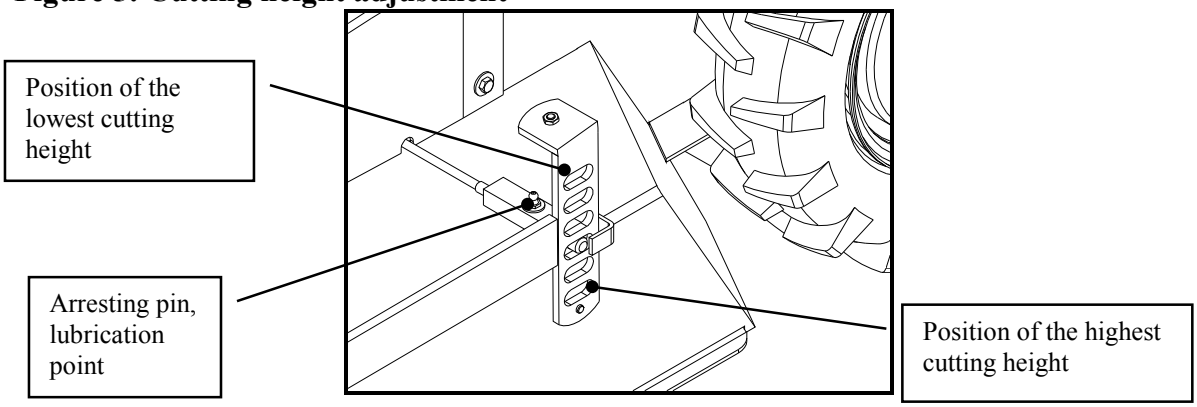

5.7.2 Travel speed choice

The adjustment of machine travel speed is ruled by similar factors as the adjustment of cutting height. The main principle dictates that the greater is the sward density or height, the lower is the machine travel speed. Gears are chosen by gear-shifting lever situated on the left (as viewed from the operator's site) on the handlebars crossbar. The shifted gear is indicated by an arrow on the lever against the adjustment line at the gear number on the scale.

⚠ **Gears should be shifted only with the machine travel lever released.**

⚠ **Never change the gear when the machine is moving!**

Figure 6: Travel speed choice

3	**Maximum working speed**. Low-height or low-density sward. Good for flat and even terrains.
2	**Medium working speed.** Medium-height and medium-density swards. Good for mild slopes.
1	**Minimum working speed**. High and high-density swards. Good for steep slopes. Cutting of brushes and self-seeded woody species.
N	**Neutral gear.** Engine starting. Machine transportation by road.
R	**Reverse gear**.

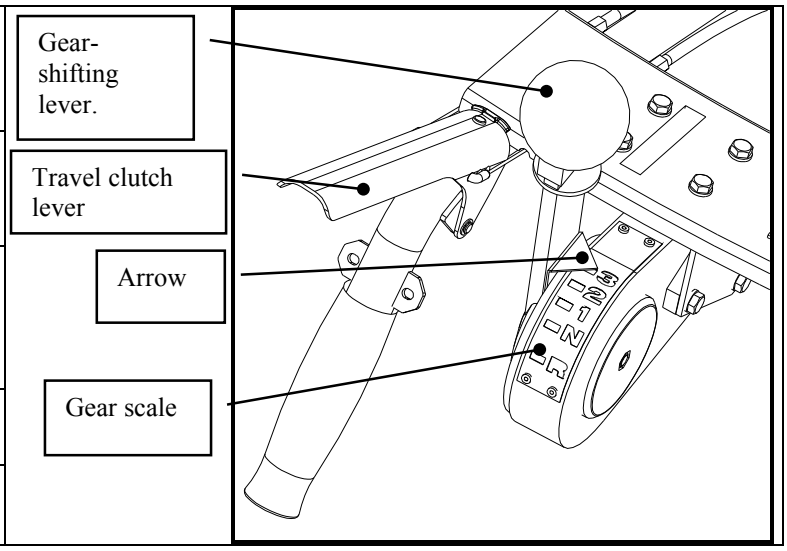

5.7.3 Sward cutting

Set the engine on the maximum speed, let the cutting blade rotate at the maximum speed and then get the machine into motion, facing the to-be-cut sward.

At cutting, you should proceed only in such a way that the to-be-cut sward is – if possible – on the left side of the machine. When cutting on slopes, it is advised to drive the machine along the slope contours. Watch a maximum permissible long-term machine inclination of 20° (30° over a short-term – up to 30 sec)!

If the cut stand is very dense, grown through, rotten from below or lodged, the machine working width must be accordingly reduced, higher cutting height adjusted or machine travel speed reduced so that the cutting blade rotations are not excessively slowed-down, which would result in the impaired cutting quality and engine overloading.

5.7.4 Problems at cutting

Choking of the space under the cutting blade cover with the grass biomass shows in:

a) **Engine markedly losing speed but not stalling**: machine travel to be switched off immediately (lever on the left handrail grip), shift in reverse gear (R), the machine front to be slightly lifted by pushing down on handrails and move the machine slightly back. The space under the cutting blade cover will do itself a partial clearance from excessive grass. Then drive the machine against the sward again.

b) **Engine losing rotations and stalling**: release both levers on the handlebars, start the engine, shift in reverse gear and back with the machine out from the sward to be cut. Switch off the engine. Clean the space under the cutting blade space and spread the cut grass across the ground surface. Start the engine, switch on the cutting blade drive and drive the machine against the sward again.

⚠ **Be very careful while lifting the machine and driving on reverse gear!**

⚠ **Tilt the machine always only backwards onto the handlebars. Be very careful while moving under the lifted machine! Secure the machine against its spontaneous motion and tilt!**

⚠ **Be very careful while cleaning the space under the cutting blade cover. Cutting edges of the blades are sharp. You should wear protective gloves or use a suitable piece of branch etc.**

5.7.5 Cutting on slopes

⚠ **If possible, do not use the machine on wet grass. Remember that the terrain you are moving on must always be safe. Walk (never run) at work. Be careful especially when changing the machine direction on slopes. Do not cut grass on steep slopes. When accidentally falling, immediately release your hold on the machine.**

⚠ **The safe slope accessibility of the machine is 10°.**

For a better steering control of the machine secure the leading wheels with locking pins in straight direction. The pins are included in machine accessories. If not to be used, they should be folded between lugs on the handrail tube. Use medium or minimum travel speed.

For cutting on slopes up to 20° it is recommended to drive the machine along the contour. It is the safest movement on the slope. It is also possible to make use of the side adjustment of handlebars.

On slopes between 20° and 30° never drive the machine in the downhill direction for a long time. Engine oil filling level moves out of sucking points and the engine oiling is insufficient.

Figure 7: Arrestment of leading wheels on the slope

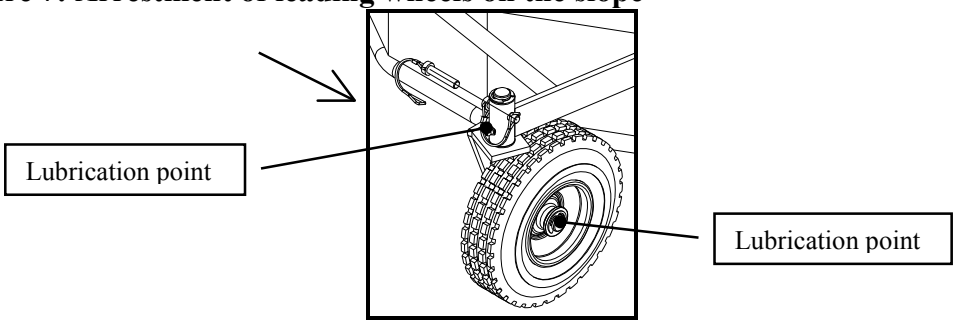

5.7.6 Machine transport by road

⚠ For the machine transport by road shift in neutral gear ("N") and press the travel clutch lever on the left handrail. The automatic brake will be unblocked and the machine can be pushed manually.

6 Maintenance, care and storage.

To ensure a long-term satisfaction with our product, it must be given proper care and maintenance. Regular maintenance of the machine will prevent its early wear providing at the same time for a correct functioning of all its parts.

Prior to any machine use, check all bolts and nuts for their correct tightening. Make sure that all safeguards are in good order. Check the blades, fixing bolts and individual elements of cutting mechanism for a possible wear or damage. In order to keep a good balance of the machine, worn-out or damaged blades and fixing bolts should be replaced with original spare parts. All worn-out or damaged components should be replaced also for the reason of machine safety. Oil level in 4-stroke engines must range within limits described in the "Instructions for engine operation and maintenance".

Follow all instructions concerning the intervals of machine maintenance and adjustments. It is advised that you keep records on the number of machine working hours and on the conditions in which the machine was working (for service purposes). The after-season maintenance of the machine should be entrusted to one of our authorized service workshops, the current maintenance as well if you do not trust your own technical skills.

⚠ **Regarding the machine weight, all maintenance and adjustment procedures are to be done by two persons.**

6.1 Machine lubrication.

6.1.1 Gear oil change and replenishment

Gearbox has permanent oil filling for the entire service life of the machine.

6.1.2 Engine oil replacement

Information is to be found in the Instructions for engine operation and maintenance. Engine oil available on the Czech market and specially designed for air-cooled engines of gardening machines is **MOGUL FORTE ALFA**.

⚠ **When replacing oils, follow the basic hygienic principles, regulations and laws on environment protection.**

Table of machine lubrication

Machine lubrication	During season	After season	Lubricant	Figure no.
All wires on the input to Bowdens cables and on the output from adjustment bolts	min 2x *	yes	silicone oil in atomizer	-
Wheel pin and fork on the suspension of leading wheels	min 1x 8 hrs *	yes	grease, engine oil	7
Contact area of handlebars with the holder of handlebars	min 2x *	yes	grease	3
Arresting pin of leading wheels	min 1x 8 hrs *	yes	silicone oil in atomizer, grease	5
Pin of tension pulleys arm, gear-shifting lever on the gearbox	min 2x	yes	grease, engine oil	9
Brake lever seating near the front belt pulley (after disassembling the plastic cover of the belt)	min 2x	yes	engine oil	9
Travel wheel hubs	min 2x *	yes	grease	-

*** besides lubrication intervals in this table, lubricate the marked points after each water washing, especially when using power water**

Figure 9: Other lubrication points

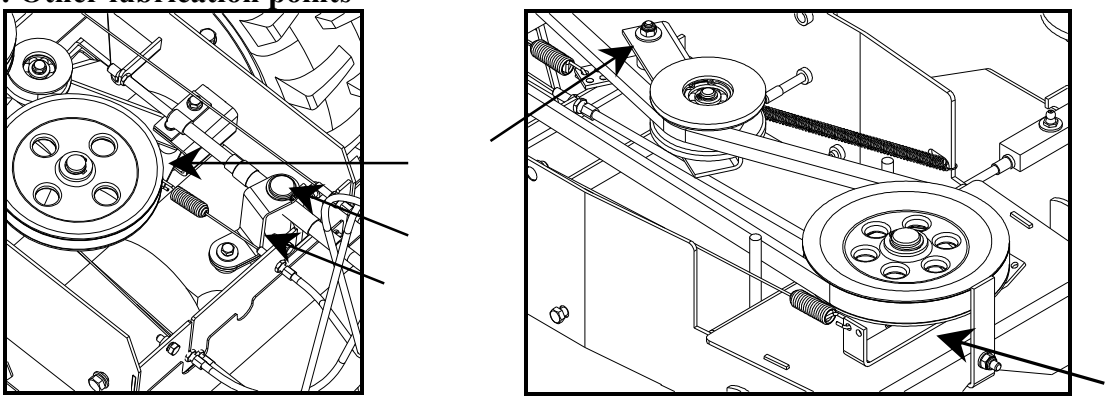

6.2 Tightening of bolted connections.

Regularly check the tightening of all important bolted connections. Always check the tightening of bolts fastening the blade to the blade holder and blade holder to the shaft prior to any machine use.

⚠ **Replacing bolts, use only original spare parts supplied by the manufacturer!**

Figure 10: Knife clamping detail

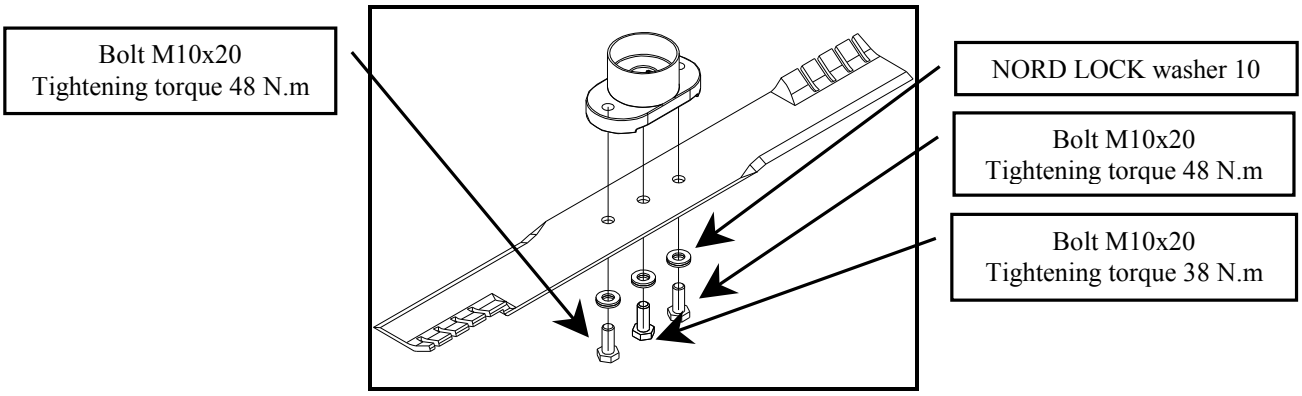

6.3 Working blade replacement and sharpening.

⚠ **The machine must be standing on a firm support plate and must be secured so that the blade is easily accessible and an unexpected spontaneous machine motion cannot occur.**

⚠ **Be very careful when dismounting the blade. Its cutting edges are sharp. Protect your hands with working gloves**.

⚠ **The engine must be switched off and the cable end connector to the spark plug disconnected!**

Working blade replacement procedure is as follows (always work with a helper):

a) Release and unscrew outer bolts „A“. Then release and unscrew central bolt „B“ and remove the blade and the blade holder from the blade shaft.
b) Plane the blade and sharpen the cutting edges. Inclination of the sharpened cutting edge should be 25° with respect to the lower plane of the blade. The blade must be well balanced after the sharpening; the material loss at sharpening the two cutting edges should be therefore identical.
c) Mount the blade and the blade holder back onto the blade shaft in a reverse order of operations.

⚠ **Central bolt M10x1x25 has a fine thread and therefore it must not be confused with outer bolts whose threads are normal!**

d) Tighten the bolts at a prescribed tightening moment.

⚠ **Should there be excessive vibrations on the machine handlebars after the installation, the blade must be unconditionally balanced once again!**

Figure 11: Correct sharpening of the blade

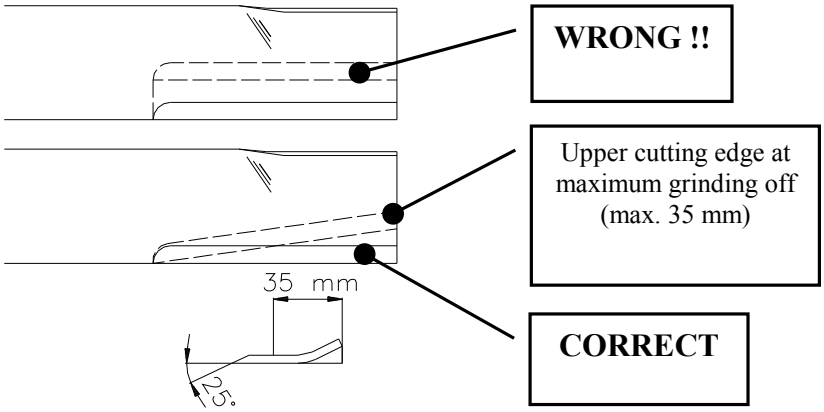

Note: Manufacturer does not answer for any damages caused by the machine due to unskilled repair or treatment of blades without the use of the original spare parts.

6.4 Replacement of V-belts and adjustment of tension pulleys.

6.4.1 Replacement of V-belts

V-belts should be replaced according to their wear (cracked sides, torn belt, sides worn out down to belt carrier fibres, belt “pulled“ out of shape) or after about 200 hours of operation at maximum. In this machine, belt pulled out to maximum is considered a belt in which distance between inner belt surfaces (at the pressed lever of the cutting blade drive clutch) is less than 7 mm (see Fig. 12).

Designation of recommended and by manufacturer approved V-belts on the machine:

1. V-belt of gearbox drive: **OPTIBELT TX13 x 660Ld 6T6K**
2. V-belt of blade drive: **OPTIBELT TX17 x 1290Ld 6T6K**

Ld = mean length of the belt

It is possible to use equivalent V-belts made by other manufacturers. However, the V-belt model must be with no rubber on sides! Only such a model of the V-belt guarantees that no belt stretching occurs and that the blade drive starting is smooth when letting-in the clutch.

⚠ **Should a different belt model be used than the original spare part, the machine manufacturer cannot guarantee a correct functioning of the transmission!**

The procedure of replacing V-belts is as follows:

a) Drain petrol from the engine tank. Unscrew two front M8 bolts and unloose two rear M8 bolts on the handlebars holder. Tilt the holder together with the handlebars backwards.
b) Dismount the upper casing of gearbox and the front plastic casing of the belt.
c) Dismount the belt guiding in front of the front driven belt pulley of the blade.
d) Dismount the M6x35 bolt (see Fig. 12 below) at the tension pulley of the blade drive belt.
e) Remove belts from the driven belt pulleys (leaving belts on the driving pulley on the engine). Unscrew four bolts M8 from the engine plate and carefully remove the plate from the machine together with the engine and the belts by pulling upwards.

⚠ **Don't dismount the bowden cable with the wire of engine revolutions control in any case!**

⚠ **Never put the engine on the side. Oil might get into the exhaust or into the air cleaner. The best engine seating is with the lower flange dwelling on two scantlings that are at least 10 cm high.**

f) Replace the worn belts with new ones. It is advised that both belts are replaced together.
g) Assemble the machine in a reverse sequence of operations. Check the adjustment of both tension pulleys prior to the assembly of casings (see „b)").
h) Complete the machine assembly.

6.4.2 Adjustment of tension pulleys

Blade drive pulley (Fig. 12)

With the lever on the right handlebar grip fully pressed down, the pulley must ensure a sufficient belt tension (spring on the cable being extended by about 10 mm as compared with loose condition). Possible corrections are to be made by means of adjustment bolt No. 2 (see Fig. 14). With the lever switched off, the pulley must be tilted away from the longitudinal machine axis at an angle of min. 5°. The wire in the Bowden cable of the tension pulley must exhibit no slackness. In the case that the adjustment bolt is completely screwed out and it is necessary to tighten the V-belt, the spring on the cable can be hooked into the front hole on the arm of the tension pulley (see Fig. 12 in the middle; Note: this connection can be used already from the manufacturer) and belt tension can be adjusted once again. Guiding plate on the right side of the machine must be parallel to the belt and at a maximum distance of 1 – 2 mm from the belt convex side.

Figure 12: Adjustment of blade drive tension pulley and belt guiding at the pulley

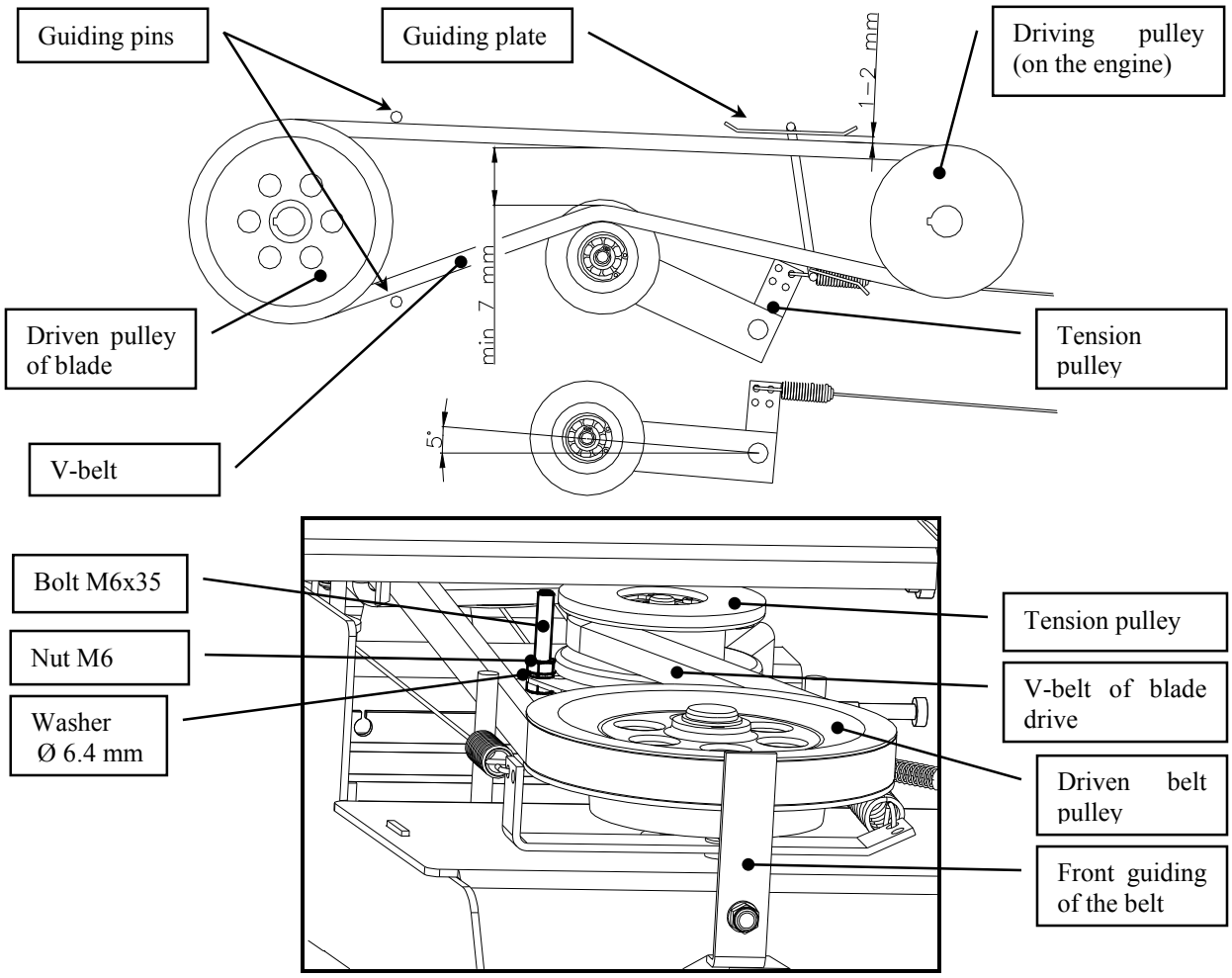

Travel clutch pulley (Figure 13)

With the lever on the left handlebar grip fully pressed down, the pulley must ensure a sufficient belt tension (spring on the cable being extended by about 10 mm as compared with the loose condition). Possible corrections are to be made by means of adjustment bolt No. 4 (see Fig. 14). With the lever switched off, the pulley must be parallel to the longitudinal machine axis. Wire in the tension pulley Bowden cable must not show any slackness. In the case that the adjustment bolt is completely unscrewed and it is necessary to tighten the V-belt, the spring on the cable can be hooked into the front hole on the arm of the tension pulley (Note: this coupling can be used already from the manufacturer) and belt tension can be adjusted once again. The V-belt must always go between two M6 bolts, which form the belt guiding when the drive is switched off.

Figure 13: Adjustment of wheel drive tension pulley

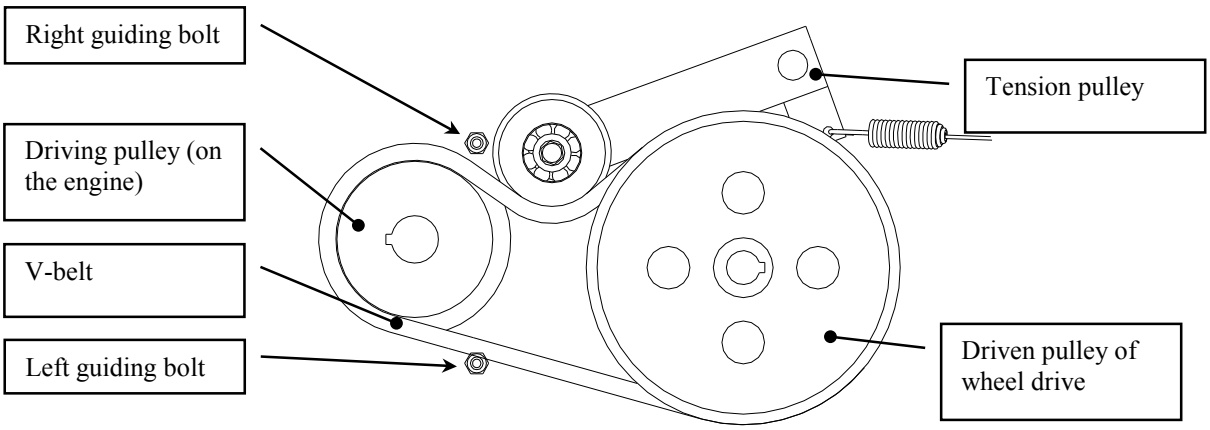

6.5 Setting up pulley wires, blade brake.

In order to guarantee low operating forces on levers which control the drive switching, it is advisable to lubricate the wires in Bowden cables at least 2x during the season with some of oils available in atomizer (e.g. SILKAL, MD Spray, WD40). Correct functioning of the machine also requires the correct adjustment of drive controls.

When adjusting the wires, always use the adjustment bolts on the handlebars crossbar first (see Fig. 14 on the right); only after you can't use the thread of the adjustment bolt, use the adjustment bolts on the machine chassis (see Fig. 14 on the left). Use two flat spanners No. 10 or No. 9 (in accordance with the size of the used M6 nut) to tighten the safety nuts of the adjustment bolts. Tighten the nuts with care. If there is no more pitch to be used in the adjustment bolts, it is possible to move the hook on the cable to another hole in the tension pulley arm (see Fig. 12 & 13), so that the wire prestressing can be adjusted with the bolt again.

Wires in the Bowden cables of blade brake and in the Bowden cable of automatic brake must always exhibit a slight slackness of about 1 mm (with the levers released) so that the performance of brakes is satisfactory. In order to achieve a clearance of the wire in the Bowden cable, adjustment bolts have to be **screwed into** the chassis or handlebars crossbar during the adjustment.

Wires in the pulley Bowden cable and in the Bowden cable of machine travel clutch must be without slackness, slightly tense. In order to make the wires tense, the adjustment bolts have to be **screwed out** of the chassis or from the handlebars crossbar during the adjustment.

Figure 14: Bowden cables and adjustment bolts

Bowden cable No.	1	2	3	4	5	6
Description	Automatic brake	Blade drive pulley	Arrestment of leading wheels	Wheel drive clutch	Gear shifting	Blade brake

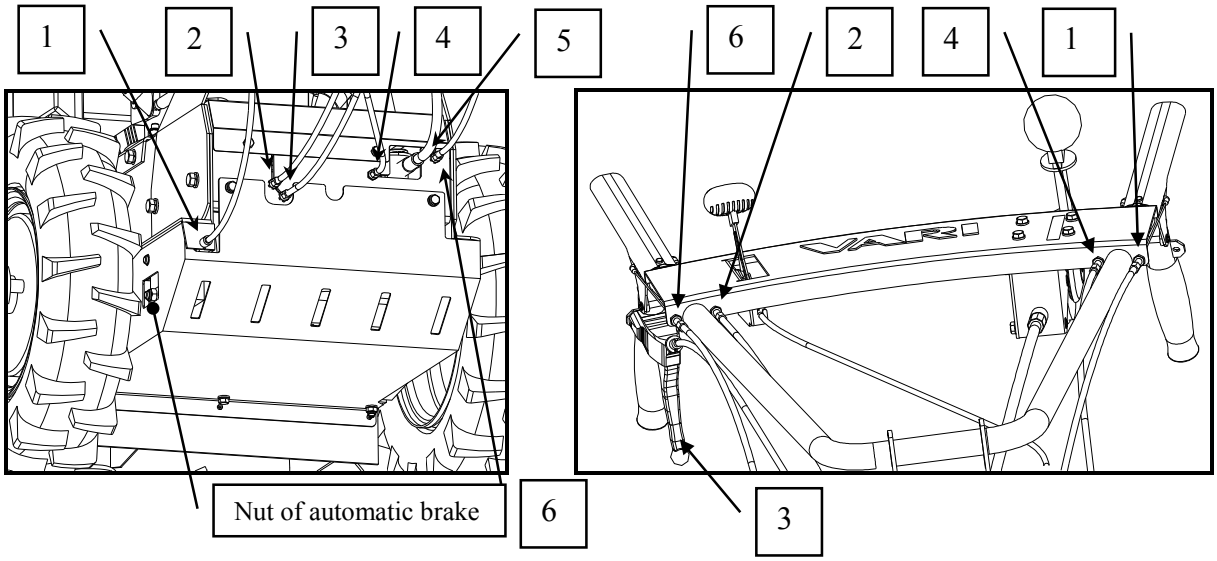

6.6 Adjustment of the automatic brake.

The automatic brake is activated by releasing the travel clutch lever on the left side of handlebars. Correct function of the automatic brake can be checked by letting the machine down the hill on a suitable slope with inclination of 30° and the machine stoppage occurs after you will have released the travel clutch lever. Suitable slope is understood to be a slope whose length is below 5m and beneath which a sufficiently large vacant space can be provided for the machine coasting.

⚠ **Be very careful when testing the function of the automatic brake. Leading wheels should be arrested and all persons or animals should be ordered out from the space in front of the machine.**

⚠ **With respect to the machine weight, the machine check and adjustment should be made by at least two persons.**

⚠ **The function of the automatic brake is to be checked always after a longer shutdown of the machine.**

Automatic brake adjustment procedure:

a) Place the machine on a suitable slope with the travel clutch lever on the left handlebar grip switched-off.

b) Tighten the nut of the automatic brake behind the left wheel (see Fig. 14) so that the machine can keep on the slope and will not continue in downhill movement.
c) Gradually loosen the nut of the automatic brake until the moment when the machine starts moving. Then tighten the nut by about a half turn.

Check of the automatic brake adjustment:

1. With the pressed clutch and shifted-in neutral gear the machine must be travelling down the hill and after the travel clutch lever release it must come to an unconditional stop. If not so, you have to tighten the nut slightly and to repeat the test.
2. With the pressed clutch and shifted-in neutral gear it must be possible to push the machine on the plain manually without increased resistance (except for the common resistance of the mechanical gearbox). If not so, you have to unloose the nut slightly. Check the adjustment of the automatic brake on the slope again (see Point 1).

6.7 Table of service operations.

Operation	**During season**	**After season**
Engine oil check	prior to any other use	*
Engine air filter check	prior to any other use	*
Blade check for clamping and intactness	prior to any other use, **	
Check of the condition of V-belts	as required	inspection, ***
Check of the function of automatic brake	prior to any other use	inspection, adjustment
Cleaning of wheel hubs and exchange of lubrication grease	-	yes
Cleaning of the machine from dirt and sward residues	after each use	yes

* - oil and air filter change intervals see the Instructions for engine operation
** - in the case of damage (also at cutting) – cracks, bending, breakage, etc. - urgent repair required!
*** - or replacement after about 200 machine working hours

6.8 Diagnostics of driving problems.

Problem	Cause	Remedial action
Blade does not turn	Tension pulley not sufficiently stressing the belt	Set-up the tension pulley by means of adjustment bolt no. 2 (see Fig. 14)
	Cable fallen out from the tension pulley lever	Install the cable back
	V-belt fallen behind the tension pulley or down from the belt pulley	Install the belt back in its place
	V-belt torn	Replacement
	Excessive belt extension	Replacement
Blade brake performance is insufficient	Brake cable stressed	Set-up the brake wire so that its slackness at released lever on the right handlebar grip is about 1 mm
	Brake cam lever insufficiently greased - dragging	To be oiled
	Worn lining	Contact the nearest service shop
Travel clutch does not switch off	Wrong adjustment of control cable V-belt carrying away	Set-up the pulley switching off so that the travel V-belt does not carry away at maximum engine speed
	V-belt running outside the guiding bolts – incorrect assembly during V-belt exchange	Install the belt between the guiding bolts (see Fig. 13)
Travel clutch does not switch on	Ruptured cable or some of cable shoes	Replacement. Contact the nearest service shop.
	Torn belt	Replacement
	Another problem of gearbox	Contact the nearest service shop
Incorrect function of the travel automatic brake	Wheels can't be unbraked	Set-up the brake (see Chapter 6.6)
		Broken cable – replacement
	Brake doesn't stop the machine or brake function is weak	Set-up the brake (see Chapter 6.6)
		Broken extension spring – replacement
		Worn lining or brake disc – contact the nearest service shop
Gear shifting out of function	Problem in gear-shifting lever	Contact the nearest service shop
	Another problem of gearbox	Contact the nearest service shop

6.9 Washing and cleaning of the machine.

⚠ **Cleaning and washing the machine, proceed to observe valid regulations and legislation on the protection of watercourses and other water resources against pollution or contamination with chemical substances.**

⚠ **Never wash the engine with a stream of water! Electric equipment might fail when starting the engine.**

All dirt, debris and plant residues should be removed from the machine after the end of the season. Check the intactness of working blade, sharpen cutting edges (or replace the blade if necessary) and conserve them with conservation oil. Travel wheels should be dismounted from the axle once in a season, cleaned and the hubs inside filled with a new filling of plastic lubricant.

⚠ **The engine must be switched off and the cable termination to the spark plug disconnected!**

6.10 Machine storage.

Prior to any longer storage, clean the machine from all dirt and plant residues. Repair damaged paint on machine parts.

For any long-time storage of the machine it is advisable:

a) to conserve the blade
b) to drain petrol out of the engine fuel tank and from the carburettor (more instructions see Instructions for engine operation and maintenance)

Access of unauthorized persons to the machine is to be prevented. Protect the machine from weather impacts but don't use air-tight protection due to a possibly increased corrosion under it.

6.11 Disposal of packaging and machine after the end of service life.

After unpacking the machine, you are obliged to provide for the disposal of the packaging material with taking into account the use of secondary raw materials according to Waste Law No. 185/2001 Gaz. (as amended) and with respect to the decrees issued by local town or municipal authorities.

The following procedure is recommended for the machine disposal after the end of its service life:

1. Dismount all parts from the machine that can still be used.
2. Dismount plastic machine parts and parts made of non-ferrous metals. The dismantled machine remainder and the dismounted parts are to be disposed according to Waste Law No. 185/2001 Gaz. (and its possible amendments) and with respect to the decrees of local town or municipal authorities.

7 Instructions for ordering spare parts.

The following data are to be used for an easier identification when ordering the spare parts:

1. Machine type, engine type, machine serial number and year of manufacture;
2. Ordering number given by manufacturer and its name in the component list;
3. Number of ordered pieces separately for each item;
4. Precise address, telephone number, fax number or e-mail address;
5. In the case of any confusion concerning the correct identification of the component or technical issues, contact your dealer.

8 Contact to manufacturer.

VARI,a.s.	Telephone:	+420 325 607 111
Opolanská 350	Fax:	+420 325 607 264
Libice nad Cidlinou		+420 325 637 550
CZECH REPUBLIC	E-Mail:	vari@vari.cz
289 07	Internet:	http://www.vari.cz/

9 The list of parts.

If not mentioned otherwise, the tables of spare parts hold for all models of the machine.

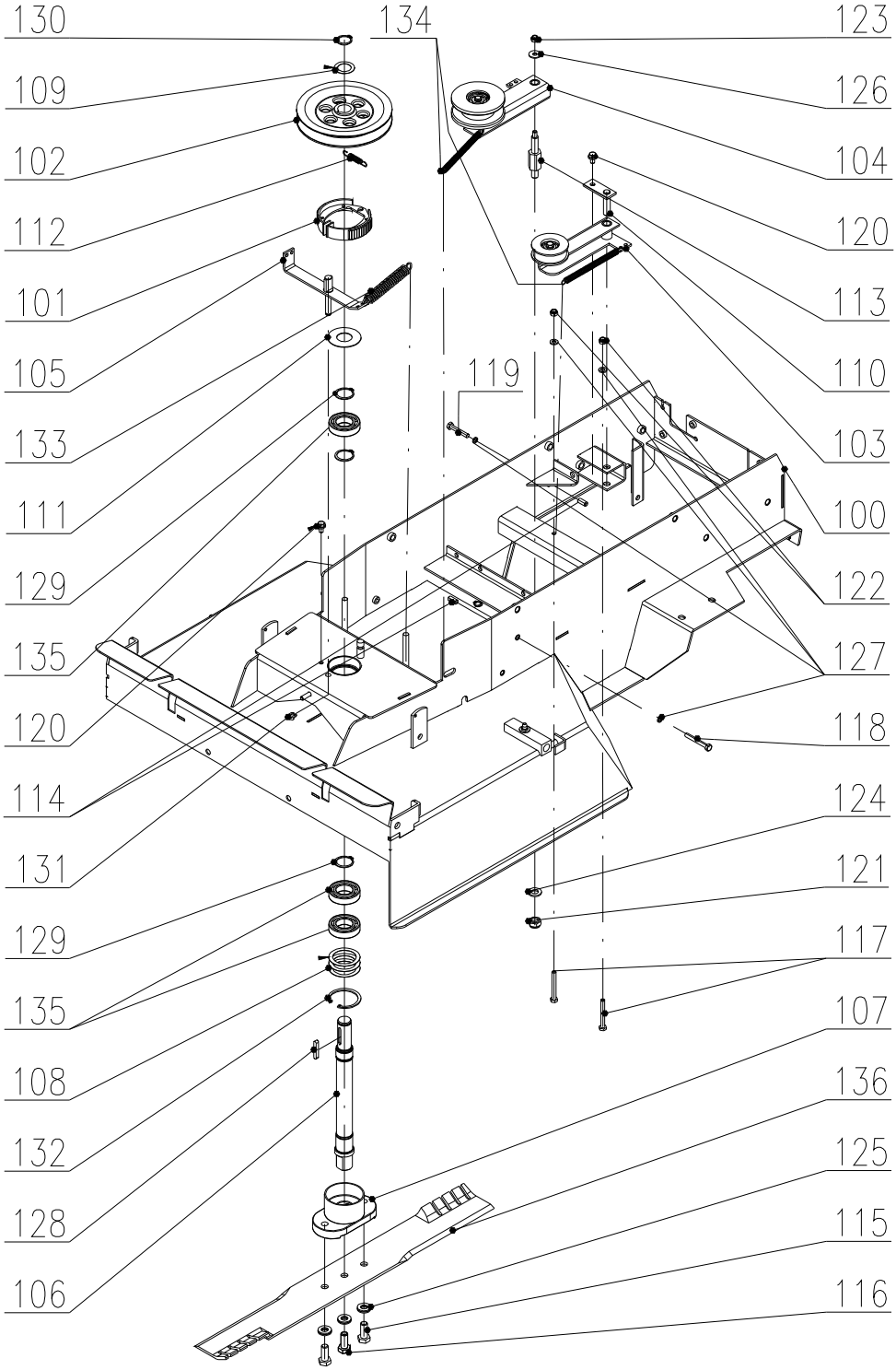
130
109
102
112
101
105
133
111
129
135
120
114
131
129
135
108
132
128
106
134
119
123
126
104
120
113
110
103
100
122
127
118
124
121
117
107
136
125
115
116

Frame and blade drive

Pos.	Part name	Dimensions	Drawing - Standard	Ord. No.	Pcs
100	Chassis of mulcher F-600		22 9 1536 027	184 096	1
101	Brake shoe		22 9 1664 024	189 014	2
102	Driven pulley of blade	F-700	32 0 3325 072	184 103	1
103	Travel clutch pulley		separate part list		1
104	Blade drive pulley		separate part list		1
105	Brake toggle		22 9 8032 048	196 003	1
106	Shaft of blade F-700		32 0 3822 024	184 093	1
107	Blade holder F-700		32 0 8021 035	184 094	1
108	Shim	47x35x0.3	32 0 9220 158	168 020	3
109	Shim	30.5x20.2x0.3	32 0 9220 058	127 041	3
110	Pin of travel pulley	weldment	22 9 9311 013	184 090	1
111	Dyed cover		32 1 9220 126	127 014	1
112	Brake shoe spring	1.5x8x41x11	632 0 9746 044	189 511	1
113	Pin of pulley arm		632 0 9311 180	184 607	1
114	Cylindrical cap	6x20 black, soft		184 528	1
115	Bolt	M10x25	ČSN 02 1103.55	184 568	2
116	Bolt	M10x1x25	ČSN EN 28676	137 501	1
117	Bolt	M6x50	ČSN 02 1103.25	184 551	2
118	Bolt	M6x45	ČSN 02 1103.25	195 523	1
119	Bolt	M6x35	ČSN 02 1103.25	184 587	1
120	Bolt	M6X10	BN 3326	184 529	1
121	Nut	M10	ČSN 02 1492.25	195 527	1
122	Nut	M6	ČSN 02 1401.25	1800141	2
123	Nut	M6	ČSN 02 1492.25	168 516	1
124	Washer	10.5	ČSN 02 1702.15	189 567	1
125	NORD LOCK washer	10	NLSP-ST-D10	184 615	3
126	Washer	6.6	ČSN 02 1429.05	195 530	1
127	Washer	6.1	ČSN 02 1740.05	6510920	4
128	Woodruff key	5e7x5x32	ČSN 02 2562	184 527	1
129	Retaining ring	25	ČSN 02 2930	131 520	3
130	Retaining ring	20	ČSN 02 2930	110 515	1
131	Socket safety washer	8	BN 13194	184 614	1
132	Retaining ring	47	ČSN 02 2931	126 504	1
133	Spring	TZ 1.8x16.2x63x20		169 514	1
134	Spring	T 088.088.0632		184 553	2
135	Bearing	6005 2RS		135 501	3
136	Blade Hi-Lift GATOR Mulcher	57 cm F-600		184 601	1

Connection of spring of blade brake and spring of blade drive pulley

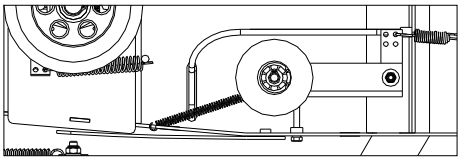

Connection of spring of travel clutch pulley

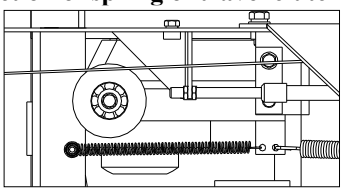

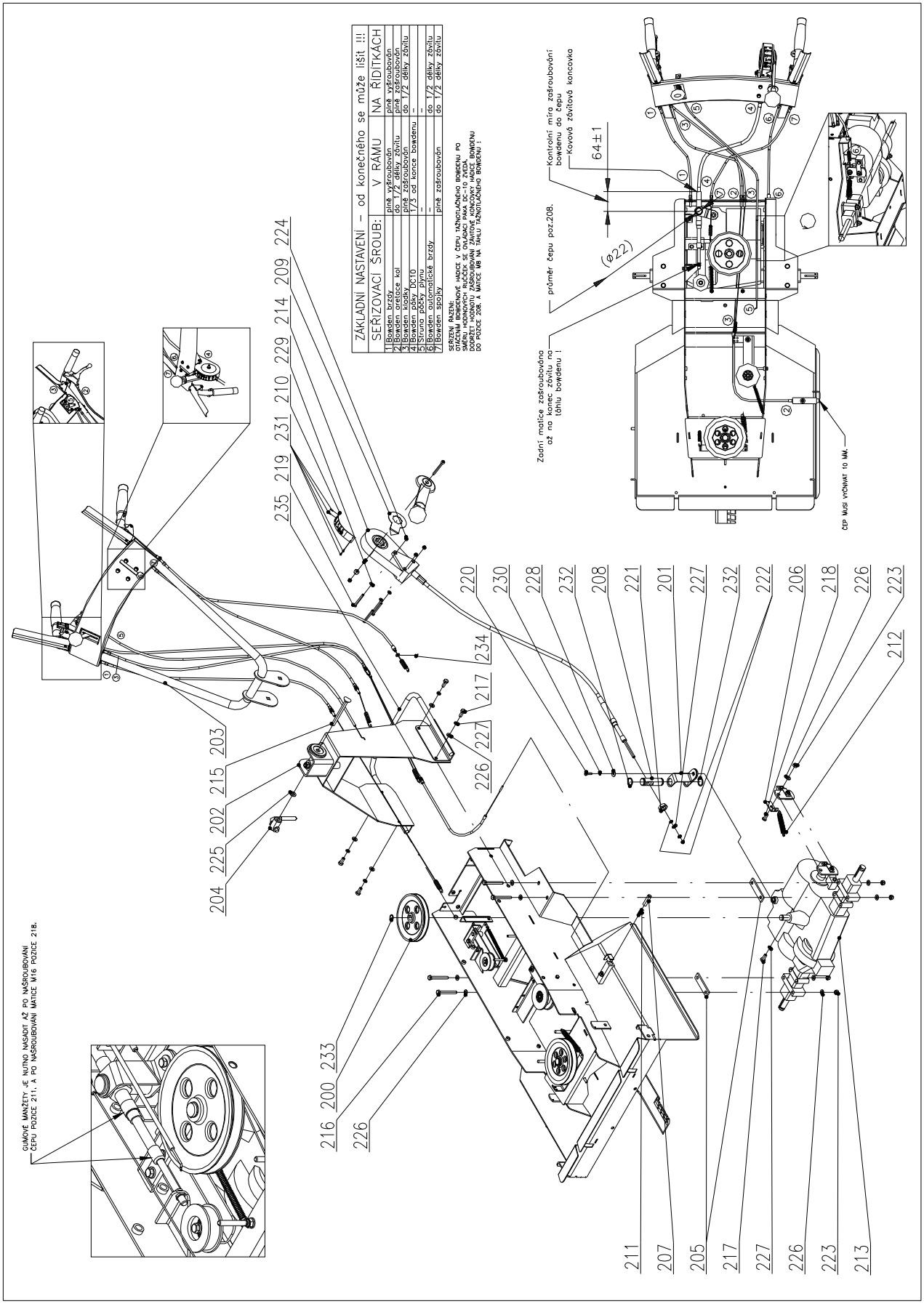
ZÁKLADNÍ NASTAVENÍ – od konečného se může lišit !!!
SEŘIZOVACÍ ŠROUB: V RÁMU NA ŘÍDÍTKÁCH
1 Bowden brzdy plně vyšroubován plně vyšroubován
2 Bowden aretace kol do 1/2 délky závitu plně zašroubován
3 Bowden kladky plně zašroubován do 1/2 délky závitu
4 Bowden páky DC10 1/3 od konce bowdenu –
5 Struna páčky plynu – –
6 Bowden automatické brzdy – do 1/2 délky závitu
7 Bowden spojky plně zašroubován do 1/2 délky závitu
SEŘÍZENÍ RÁZENÍ:
OTÁČENÍM BOWDENOVÉ HADICE V ČEPU TAŽNOTLAČNÉHO BOWDENU PO SMĚRU HODINOVÝCH RUČIČEK SE OVLÁDACÍ PÁKA DC-10 ZVEDÁ. DODRŽET HODNOTU ZAŠROUBOVÁNÍ ZÁVITOVÉ KONCOVKY HADICE BOWDENU DO POZICE 208. A MATICE M8 NA TÁHLU TAŽNOTLAČNÉHO BOWDENU !
Kontrolní míra zašroubování bowdenu do čepu
Kovová závitová koncovka
64±1
průměr čepu poz.208.
(ø22)
Zadní matice zašroubována až na konec závitu na táhlu bowdenu !
ČEP MUSÍ VYČNÍVAT 10 MM.
GUMOVÉ MANŽETY JE NUTNO NASADIT AŽ PO NAŠROUBOVÁNÍ ČEPU POZICE 211. A PO NAŠROUBOVÁNÍ MATICE M16 POZICE 218.
235 219 231 210 229 214 209 224
220 230 228 232 208 221 201 227 232 222 206 218 226 223 212
234 217 227 226
203 215 202 225 204
216 200 233 226
211 207 205 217 227 226 223 213

Gearbox and handlebars holder

Pos.	Part name	Dimensions	Drawing - Standard	Ord. No.	Pcs
200	Driven travel pulley	F-700	22 9 3325 039	184 041	1
201	Gear shifting lever	weldment	22 9 3832 008	184 045	1
202	Prefabricated handlebars holder		separate part list		1
203	Complete handlebars F-600		separate part list		1
204	Tightening nut		22 9 9016 010	192 012	1
205	Spacing band		32 0 1530 138	184 040	1
206	Draw plate		32 0 1740 017	184 042	1
207	Pin of leading wheels arrestment		32 0 9311 184	184 097	1
208	Pin of push-pull bowden cable		32 0 9311 169	184 554	1
209	Indicator		632 0 3941 004	184 578	1
210	Gear shifting scale		632 0 8741 003	184 617	1
211	Spring	1.25x11.25x28x8.5	632 0 9746 004	124 500	1
212	Spring	TZ 1.8x16.2x63x20		169 514	1
213	Gearbox	MST 203-566		184 618	1
214	Lever START DC10	1LC0717001, L=1350		184 534	1
215	Carriage bolt	M10x110	ČSN 02 1319.25	184 550	1
216	Bolt	M8x65, 5.8, shape A	ČSN EN 24014		1
217	Bolt	M8x20	ČSN 02 1103.25	189 548	5
218	Bolt	M8x20	BN 1206	184 588	1
219	Bolt	M6x50	ČSN 02 1103.25	184 551	4
220	Bolt	1/4"x3/4"	BN 69	184 558	1
221	Nut	M16x1.5	ČSN 02 1403.25	184 556	1
222	Nut	M8	ČSN 02 1403.25	1 300 197	2
223	Nut	M8	ČSN 02 1492.25	104 622	5
224	Nut	M6	ČSN 02 1492.25	168 516	3
225	Washer	10.5	ČSN 02 1702.15	189 567	1
226	Washer	8.4	ČSN 02 1702.15	131 517	13
227	Washer	8.2	ČSN 02 1740.05	104 574	7
228	Washer	6.6	ČSN 02 1729.05	195 530	1
229	Washer	6.4	ČSN 02 1702.15	189 571	3
230	Washer	6.1	ČSN 02 1740.05	6 510 920	1
231	Punch rivet	3x8	ČSN 02 2391.3	182 525	4
232	Retaining ring	22	ČSN 02 2930	125 504	2
233	Retaining ring	16	ČSN 02 2930	108 503	1
234	Stirrup ring	5	ČSN 02 2929.05	150 606	1
235	Buffer weldment		22 9 8643 008	184 110	1

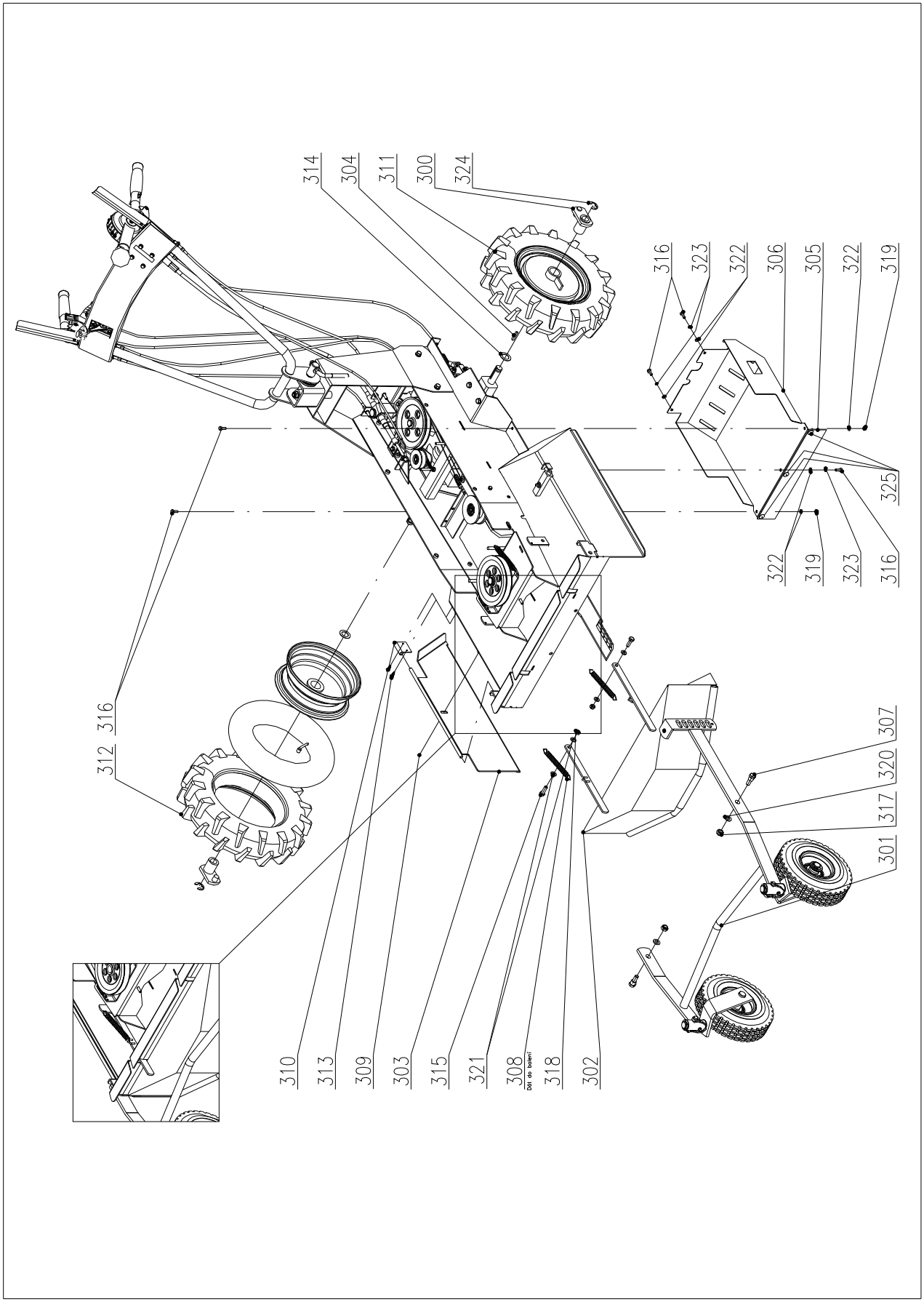
314
304
311
300
324
316
323
322
306
305
322
319
325
322
319
323
316
316
312
307
320
317
301
310
313
309
303
315
321
308
Dół do boleni
318
302

Wheels, side flap, front cover

Pos.	Part name	Dimensions	Drawing - Standard	Ord. No.	Pcs
300	Lug of differential gear		22 9 1625 031	184 102	2
301	Leading wheels F-600		separate part list		1
302	Front cover F-600	weldment	22 9 8549 033	184 098	1
303	Side flap F-600	weldment	22 9 8549 034	184 099	1
304	Woodruff key	3/16"	32 0 3330 021	189 036	2
305	Rubber mudflap	F-700	32 0 8530 038	184 043	1
306	Lower cover of gearbox		32 0 8545 072	184 559	1
307	Bolt		32 0 9016 089	182 038	2
308	Spring	TZ 1.8x16.2x63x20		169 514	2
309	Control element	M8x14 VCF 30		184 606	1
310	Swing joint	90500531 P		184 612	1
311	Wheel 395/30 F arrow pattern, left	3.50-8 4PR, F-600		184 619	1
312	Wheel 395/30 F arrow pattern, right	3.50-8 4PR, F-600		184 620	1
311.1 312.1	Tyre	3.5-8.00 KING TIRE		184 629	1 1
311.2 312.2	Tyre tube	3.5-8.00 angle valve TR87		184 628	1 1
311.3 312.3	Wheel rim 395/30 F			184 630	1 1
313	Bolt	ST 4.8x16	BN 1880	184 605	2
314	Adapter ring	20x32x1	DIN 988	184 622	2
315	Bolt	M8x25	ČSN 02 1103.25	110 525	2
316	Bolt	M6x16	ČSN 02 1103.25	189 522	5
317	Nut	M10	ČSN 02 1492.25	195 527	2
318	Nut	M8	ČSN 02 1492.25	104 622	2
319	Nut	M6	ČSN 02 1492.25	168 516	2
320	Washer	10.5	ČSN 02 1702.15	189 567	2
321	Washer	8.4	ČSN 02 1702.15	131 517	4
322	Washer	6.4	ČSN 02 1702.15	189 571	5
323	Washer	6.1	ČSN 02 1740.05	6 510 920	3
324	Stirrup ring	15	ČSN 02 2929	184 621	2
325	Rivet	ASL 4810		184 623	3

Notes:
Pos. 311 and 312 differ only in the direction of arrows on the tyre;
tyre, tyre tube and wheel rim are the same for both left and right wheel.

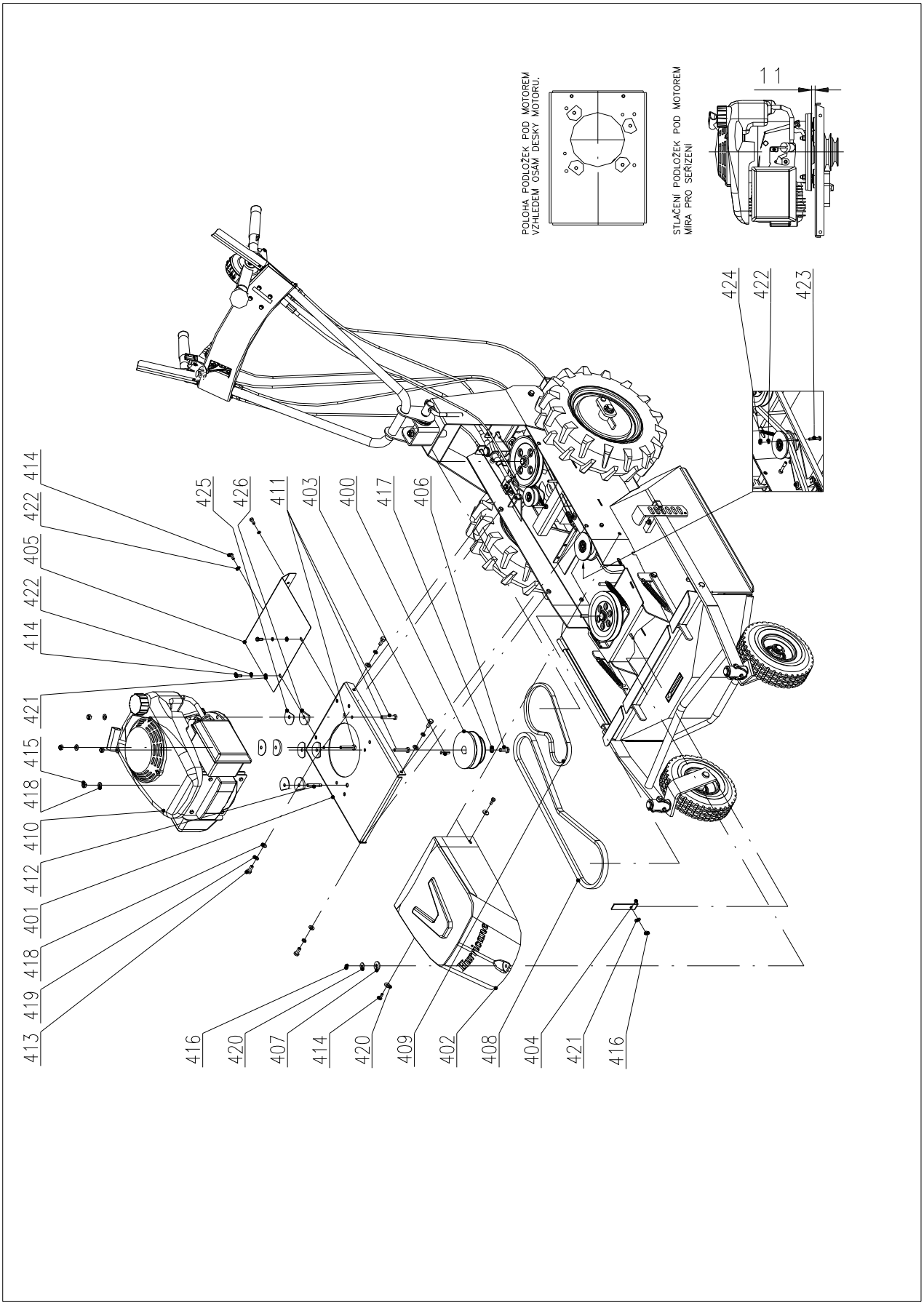
POLOHA PODLOŽEK POD MOTOREM
VZHLEDEM OSAM DESKY MOTORU.
STLAČENI PODLOŽEK POD MOTOREM
MIRA PRO SEŘIZENI
11
424
422
423
425
426
411
403
400
417
406
414
422
405
422
414
421
415
418
410
412
401
418
419
413
416
420
407
414
420
409
402
408
404
421
416

Engine, blade and wheels drive, cover

Pos.	Part name	Dimensions	Drawing - Standard	Ord. No.	Pcs
400	Driving pulley F-600		22 9 3325 044	184 100	1
401	Engine plate F-700	weldment	22 9 8032 054	184 049	1
402	Mulcher blade cover	complete	22 9 8545 039	184 020	1
403	Woodruff key	3/16"	32 0 3330 021	189 036	1
404	Front belt guide		32 0 3340 007	184 056	1
405	Upper gearbox cover		32 0 8545 078	184 101	1
406	Bolt	W 3/8"	32 0 9016 057	105 011	1
407	Rubber washer		32 0 9220 230	189 105	1
408	V-belt OPTIBELT	TX17x1290Ld 6T6K		184 563	1
409	V-belt	TX13x660Ld 6T6K		184 562	1
410	Engine HONDA	GCV 190 A N2G7SD		184 624	1
411	Bolt	M8x40	ČSN 02 1101.25	169 509	3
412	Bolt	M8x35	ČSN 02 1174.25	189 590	1
413	Bolt	M8x20	ČSN 02 1103.25	189 548	4
414	Bolt	M6x16	ČSN 02 1103.25	189 552	6
415	Nut	M8	ČSN 02 1492.25	104 622	4
416	Nut	M6	ČSN 02 1492.25	168 516	2
417	Washer	10.2	ČSN 02 1740.05	106 530	1
418	Washer	8.4	ČSN 02 1702.15	131 517	8
419	Washer	8.2	ČSN 02 1740.05	104 574	4
420	Washer	6.6	ČSN 02 1727.15	169 508	3
421	Washer	6.4	ČSN 02 1702.15	189 571	3
422	Washer	6.1	ČSN 02 1740.05	6 510 920	4
423	Bolt	M6x35	ČSN 02 1103.25	184 587	1
424	Nut	M6	ČSN 02 1401.25	1 800 141	1
425	Washer		32 0 9225 010	189 009	3
426	Rubber washer		32 0 9225 011	189 010	3

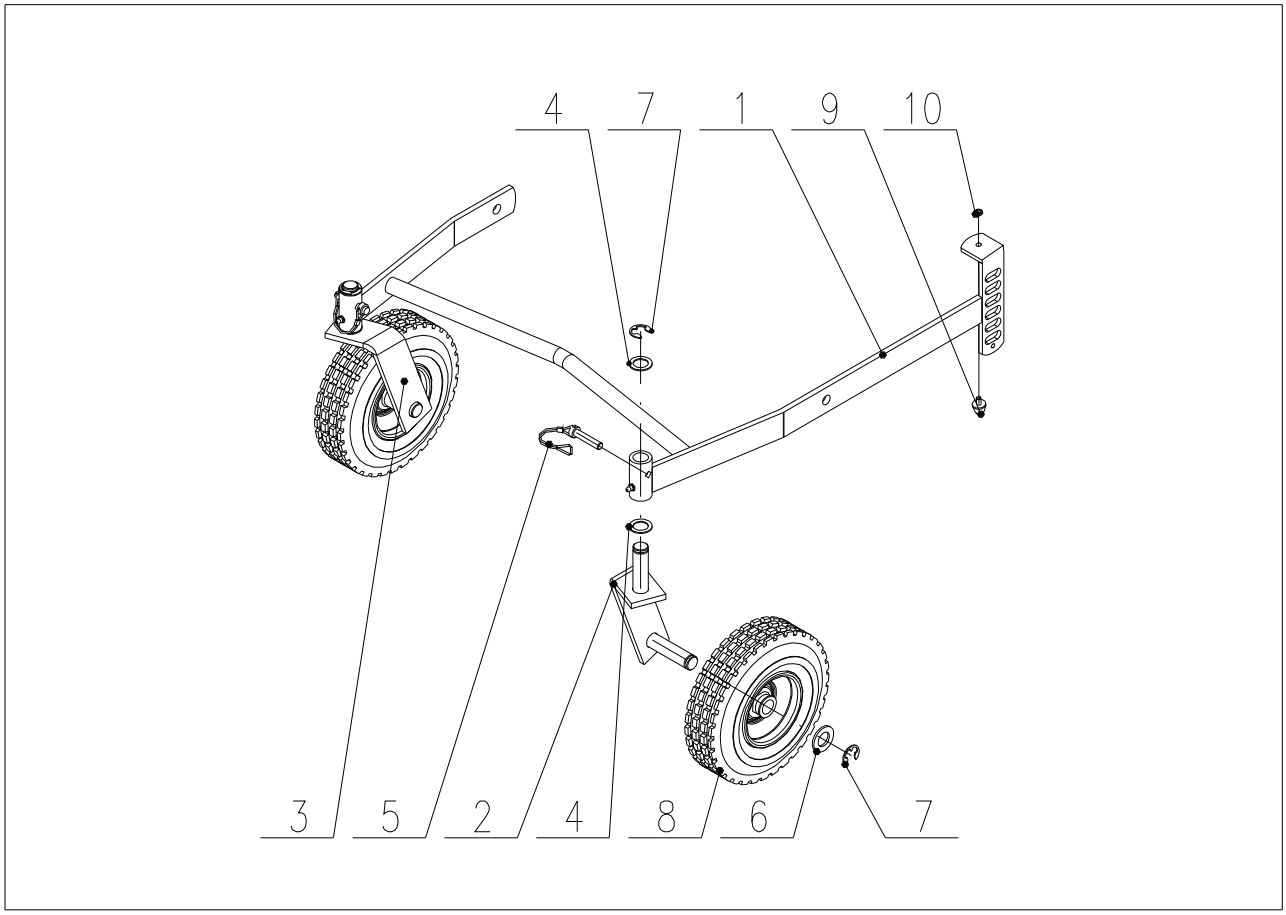

Leading wheels

Pos.	Part name	Dimensions	Drawing - Standard	Ord. No.	Pcs
1	Frame of leading wheels	weldment	22 9 1646 034	184 095	1
2	Wheel hinge, left		22 9 1646 036	184 104	1
3	Wheel hinge, right		22 9 1646 037	184 105	1
4	Sliding washer		32 0 9220 229	182 039	4
5	Elastic cotter pin	AMA 2914		182 533	2
6	Washer	21	ČSN 02 1702.15	124 530	2
7	Stirrup ring	15	ČSN 02 2929	184 621	4
8	Wheel	220/20 F, bear. diam. 20mm		184 625	2
9	Stop spring	N 77.16 42-85		182 531	1
10	Nut	M6	ČSN 02 1403.25	105 520	1

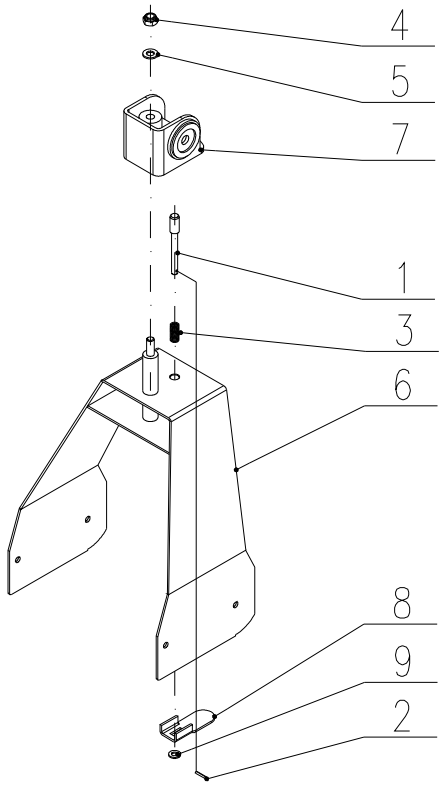

Handlebars holder

Pos.	Part name	Dimensions	Drawing - Standard	Ord. No.	Pcs
1	Pivot		32 0 9311 103	192 007	1
2	Pin	3x18	ČSN 02 2156	127 504	1
3	Spring	1.25x11.25x28x8.5	32 0 9746 004	124 500	1
4	Nut	M10	ČSN 02 1492.25	195 527	1
5	Washer	10.5	ČSN 02 1702.15	189 567	1
6	Handlebars holder F-700		22 9 8045 064	184 058	1
7	Swivel		22 9 8053 013	184 003	1
8	Detent lever		32 0 8041 018	184 004	1
9	Washer	8.4	ČSN 02 1702.15	131 517	1

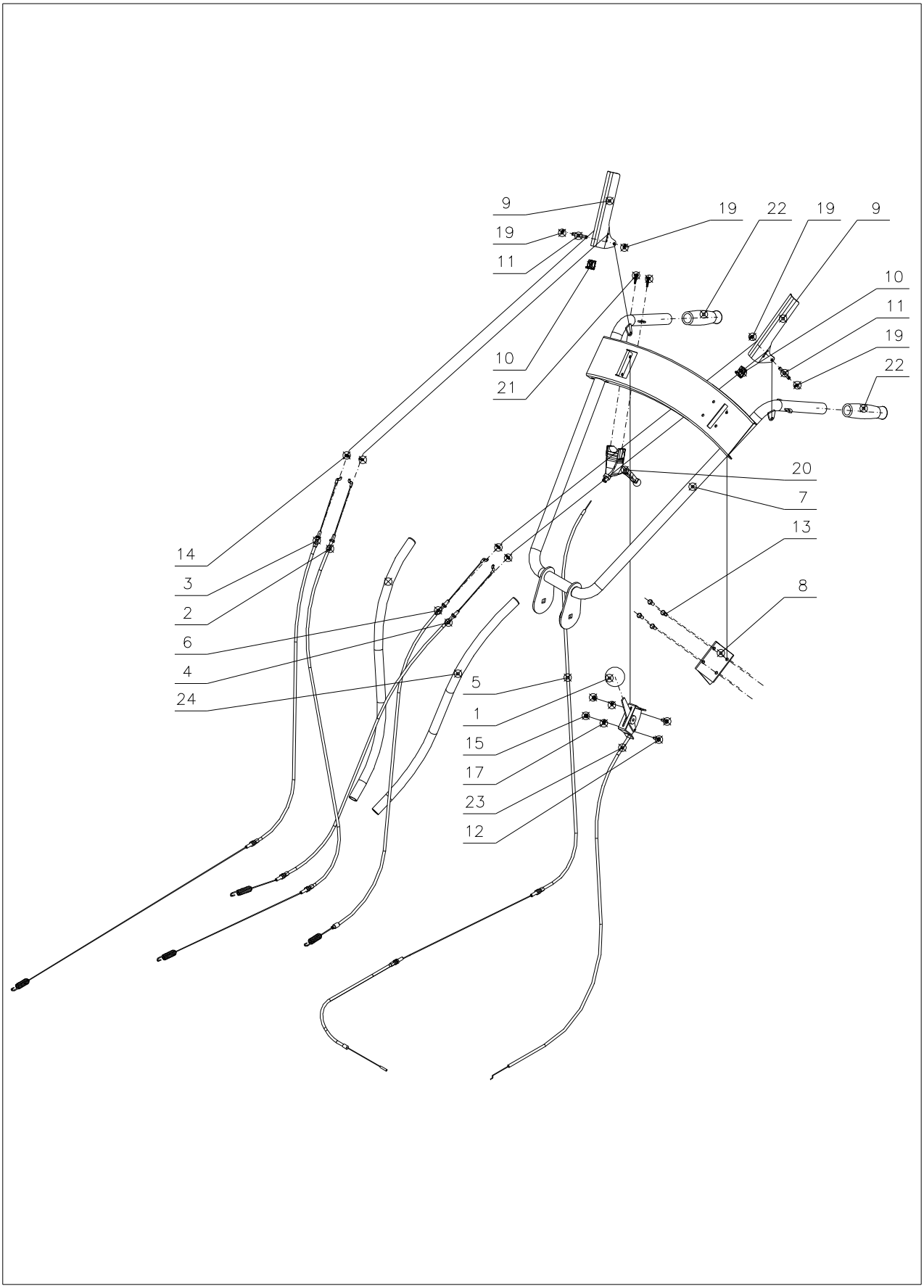
9
19
11
10
21
19
22
19
9
10
11
19
22
20
7
13
8
14
3
2
6
4
24
5
1
15
17
23
12

Handlebars F-600

Pos.	Part name	Dimensions	Drawing - Standard	Ord. No.	Pcs
1	Red knob		1AC02040	184 519	1
2	Bowden cable of pulley F-700		22 9 8074 050	184 502	1
3	Bowden cable of brake F-700		22 9 8074 051	184 501	1
4	Bowden cable of clutch F-700		22 9 8074 053	184 503	1
5	Bowden cable of wheel arrestment F-700		22 9 8074 054	184 504	1
6	Bowden cable of automatic brake		22 9 8074 061	184 510	1
7	Swivel handlebars, weldment		22 9 8078 064	184 011	1
8	Holder of lever DC-10		32 0 8032 128	184 068	1
9	Control lever		32 0 8058 009	196 013	2
10	Rubber lever stop		32 0 8065 002	196 519	2
11	Lever pin		32 0 9311 157	196 520	2
12	Bolt	M5x12	ČSN 02 1103.25	184 524	2
13	Rivet	AST 6415 MB		184 626	4
14	Nut	M6	ČSN 02 1403.25	105 520	4
15	Nut	M5	ČSN 02 1492.25	105 518	2
16					
17	Washer	5.3	ČSN 02 1702.15	189 581	2
18					
19	Stirrup ring		ČSN 02 2929.05	189 576	4
20	Brake lever	SACCON LK0651B		184 517	1
21	Self-tapping screw	26750 KB50/5/x20 ZN		184 627	2
22	Rubber handle, black	START 1MA08010		184 518	2
23	Lever START 1AT09006	L=1300		184 520	1
24	Bowden cable protection		32 0 8520 009		2

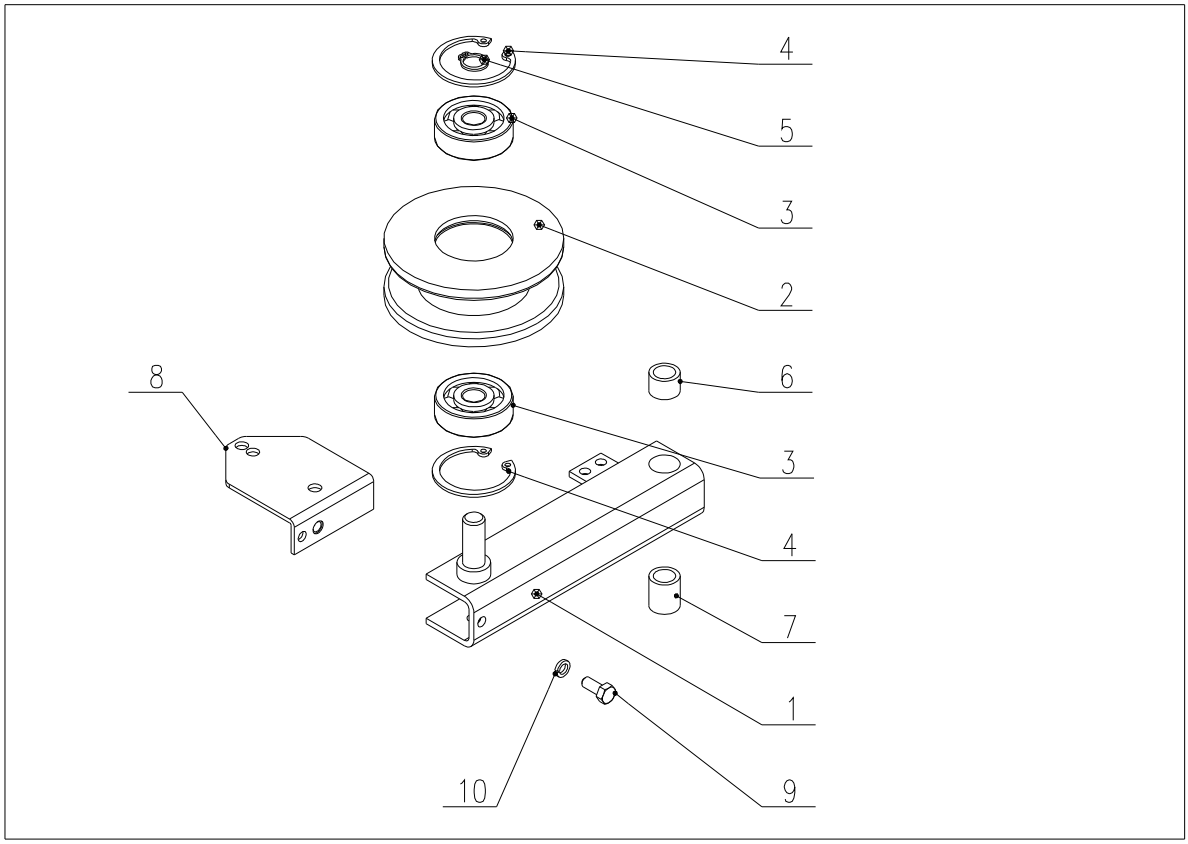

Blade drive pulley

Pos.	Part name	Dimensions	Drawing - Standard	Ord. No.	Pcs
1	Pulley arm		22 9 3330 021	184 069	1
2	Pulley for belt X17		632 0 3325 069	184 579	1
3	Bearing	6300 2RS		189 585	2
4	Retaining ring	35	ČSN 02 2931	126 503	2
5	Retaining ring	10	ČSN 02 2930	602 1 519	1
6	Friction bearing	A 10x14x10 SZ		184 599	1
7	Friction bearing	A 10x14x16 SZ		184 600	1
8	Belt guide at pulley		32 1 3340 010	184 108	1
9	Bolt	M5x12	ČSN 02 1103.25	184 524	1
10	Washer	5.1	ČSN 02 1740.05	127 512	1

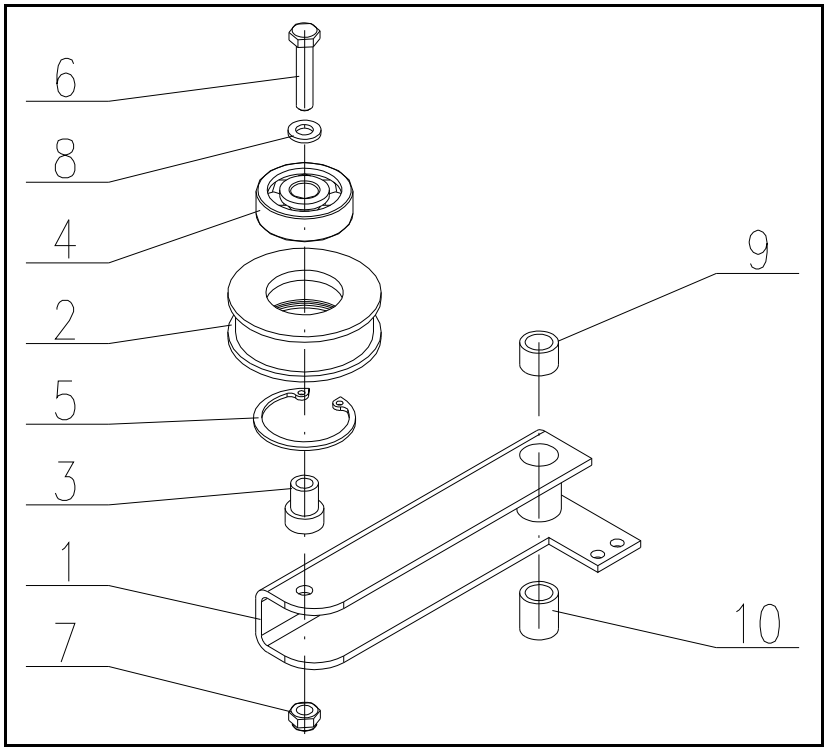

Wheel drive pulley

Pos.	Part name	Dimensions	Drawing - Standard	Ord. No.	Pcs
1	Arm of wheel drive pulley		22 9 3330 025	184 091	1
2	Wheel drive pulley		632 0 3325 068	184 512	1
3	Pulley bearing shell		632 0 9320 071	196 528	1
4	Friction bearing	6300 2RS		189 585	1
5	Retaining ring	35	ČSN 02 2931	126 503	1
6	Bolt	M6x30	ČSN 02 1101.25	184 581	1
7	Nut	M6	ČSN 02 1492.25	168 516	1
8	Washer	6.4	ČSN 02 1702.15	189 571	1
9	Friction bearing	A 10x14x10 SZ		184 599	1
10	Friction bearing	A 10x14x16 SZ		184 600	1

10 Letter of Guarantee.

To be completed by manufacturer

Name of product	**Mulcher**
Model	***Hurricane* F-600**
Serial number	…….
Engine serial number	…….
Warranty (months)	……24……..
Output control	……OTK 3……Vladimir Drobny……..

The above product was passed over to the purchaser without any defects including the appropriate commercial and technical documentation and accessories. The purchaser was duly informed about the principles of correct operation and technical maintenance of the product.

To be completed by seller

Name of purchaser	…….
Address of purchaser	…….
Purchaser's signature	…….
Place of sale	…….
Date of sale	…….
Seller's stamp and signature	…….

GUARANTEE CONDITIONS

Subject of warranty:

Warranty relates to the basic product supplied by VARI a.s., including accessories

Warranty period:

Warranty period for the product and accessories supplied with the product is 24 months from the date of sale to the purchaser if not stated otherwise in the **"Service Manual for VARI Machines and Systems Equipped with HONDA Engines**". Time from the enforcement of liability for defects to the date when the user was obliged to take over the thing after the end of repair is not included in the warranty period.

The seller is obliged to give the purchaser a receipt confirming the date of the right exercise and repair and the time of its duration. If the product is exchanged, the warranty period starts running again from the date on which the purchaser took over the new product. If it is a whole assembly to be replaced, the warranty period starts running for the given assembly again from the date of product take-over.

Scope of manufacturer's liability:

Manufacturer bears responsibility for the product having properties usual for the kind of the product in question and specified parameters for the whole period of warranty. The manufacturer does not answer for defects of the product resulting from current wear or from the product's use for purposes other than specified.

Warranty extinction:

Claim of warranty becomes extinct if:

a) the product was not used and maintained as specified in the Instructions for use, or it was damaged by any unauthorized operation by the user;
b) the product was used in conditions or for purposes other than specified;
c) the letter of guarantee for the product cannot be presented;
d) data filled in the original product's documentation by the manufacturer, seller or service organization were intentionally falsified;
e) a part of the product was replaced with a non-original component;
f) the product was damaged or excessively worn due to improper maintenance;
g) the product suffered an accident or was damaged by an Act of God;
h) a modification was made to the product made without manufacturer's consent;
i) defects result from improper storage of the product;
j) defects result from natural and common operating wear of the product;
k) the prescribed warranty inspection of the product was not made or was not made within the set-up time (this applies only for products with extended warranty period). Warranty inspections must be made in selected products with the extended warranty period according to terms stipulated in the **"Service Manual for VARI Machines and Systems Equipped with HONDA Engines"**.
l) the product was connected to or operated with the equipment not approved by the manufacturer.

Complaints:

Complaints are applicable by purchasers at the seller's. When applying a complaint, the purchaser is obliged to submit a duly filled in letter of guarantee. Warranty repairs are carried out by sellers or by special service shops appointed by them.

Legislation:

Other purchaser/seller relations are ruled by relevant stipulations of the Civil Code No. 40/1964 Gaz. (as amended), and/or Commercial Code No. 513/1991 Gaz. (as amended).

Warranty inspection 1
Date: .....Person in charge:.....

Service shop stamp and signature

Warranty inspection 1

Machine model.....
Serial No.:.....

Warranty inspection 2
Date:.....Person in charge:.....

Service shop stamp and signature

Warranty inspection 2

Machine model.....
Serial No.:.....

1st Warranty service
Date of complaint delivery:.....
Date of repair completion:.....
Brief description of the defect:.....
.....
.....
Replaced parts (new warranty of ... months):.....
Parts:.....
.....
.....
Repair made by: .....

Service shop stamp and signature

1st Warranty service

Machine model.....
Serial No.:.....
Date:.....
Repair made by:.....
.....
.....
.....
Stamp and signature.....
.....
.....
.....

2nd Warranty service
Date of complaint delivery:.....
Date of repair completion:.....
Brief description of the defect:.....
.....
.....
Replaced parts (new warranty of ... months):.....
Parts:.....
.....
.....
Repair made by: .....

Service shop stamp and signature

2nd Warranty service

Machine model.....
Serial No.:.....
Date:.....
Repair made by:.....
.....
.....
.....
Stamp and signature.....
.....
.....
.....

3rd Warranty service
Date of complaint delivery:.....
Date of repair completion:.....
Brief description of the defect:.....
.....
.....
Replaced parts (new warranty of ... months):.....
Parts:.....
.....
.....
Repair made by: .....

Service shop stamp and signature

3rd Warranty service

Machine model.....
Serial No.:.....
Date:.....
Repair made by:.....
.....
.....
.....
Stamp and signature.....
.....
.....
.....

4th Warranty service
Date of complaint delivery:.....
Date of repair completion:.....
Brief description of the defect:.....
.....
.....
Replaced parts (new warranty of ... months):.....
Parts:.....
.....
.....
Repair made by: .....

Service shop stamp and signature

4th Warranty service

Machine model.....
Serial No.:.....
Date:.....
Repair made by:.....
.....
.....
.....
Stamp and signature.....
.....
.....
.....